RP GROUP
SOLUTIONS IN SAFETY + LIGHTING

Art.-Nr: ZAW019ML
Emergency light Centralised power supply systems Wall mounting, Central power supply (ML), CPS, IP65, Zinc die-cast, White



Robust, zinc die-cast wall surface-mounted luminaire for illuminating escape and emergency routes.

Particularly suited to illuminating escape and emergency routes at the exit and outside the building up to a safe zone. The radiating characteristics distribute the light parallel to the wall.

Control and monitoring via central power supply system.

More information
www.rp-group.com/en/item/ZAW019ML

TECHNICAL DATA

Luminaire type	Emergency light
Mounting	Wall mounting
Pictograph	No
Illuminant	LED
Housing material	Zinc die-cast
Housing color	White
Protection type (IP)	IP65
Impact resistance (IK)	8
Certification	Waste disposal, CE, D-sign
Insulation class	1
Supply	Centralised power supply systems
Monitoring	Central power supply (ML)
Bridging time	CPS
Battery	/
Operating mode	single luminaire switching
Input voltage AC	230 V
Input frequency	50 / 60 Hz
Input voltage DC	216 V
Power max.	2,3 W

Power maintained	2,3 W
Power non-maintained	1 W
Ambient temperature maintained mode	-30 °C to 35 °C
Ambient temperature non-maintained mode	-30 °C to 40 °C
Depth	315 mm
Width	65 mm
Height	140 mm
Weight	2.02
Weight incl. packaging	2.14
Connection cross-section	1.5 mm²
Switching input	No
Emergency light blocking	No
Battery connection	No
Dimming function	Yes
Luminous flux mains	220 lm
Luminous flux emergency	220 lm
Customs tariff number	94056180
GTIN	4260581710064

TECHNICAL DRAWING

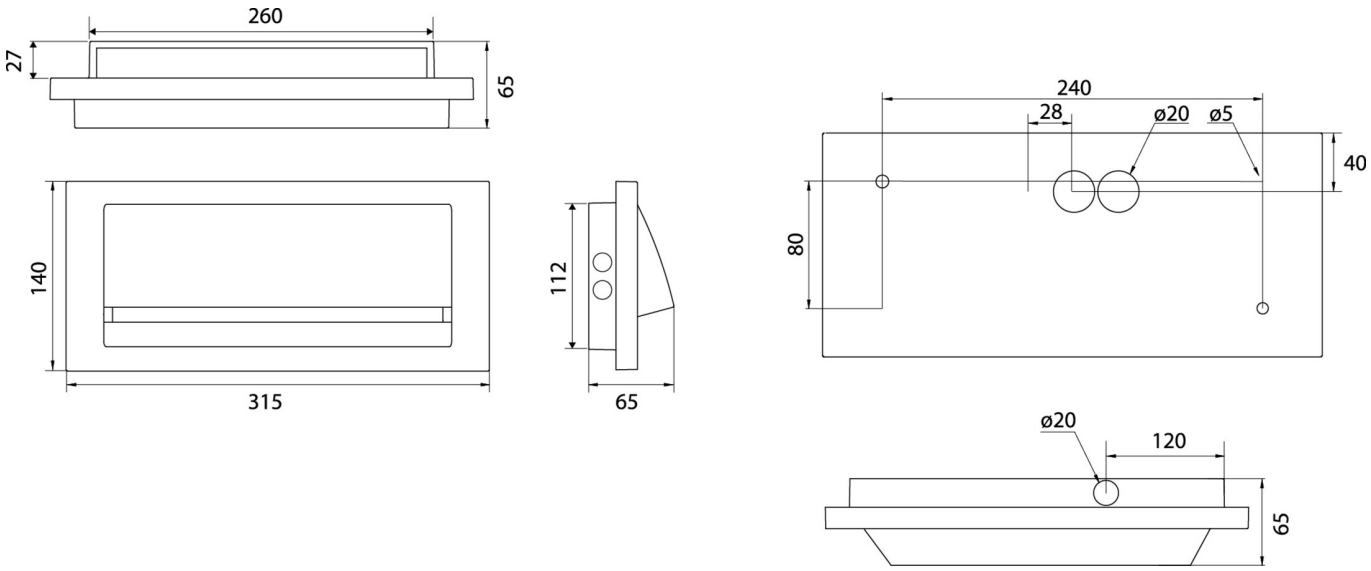

As of: 23.11.2026 - Subject to technical changes and errors.