RP GROUP
SOLUTIONS IN SAFETY + LIGHTING

Art.-Nr: FMWD009ML
Exit sign Centralised power supply systems
Wall mounting, Central power supply (ML), CPS, 20 m, IP65, Zinc die-cast, White



Robust zinc die-cast emergency exit sign luminaire for a dynamic escape guidance system.

10 display options are provided in both normal and activated mode. The two operating modes can be easily selected using the rotary coding switch.

Operating modes are activated via a potential-free contact, e.g. on a smoke detector or the fire alarm system. The supply needed for the potential-free contact is generated and monitored in the luminaire. So no additional voltage supply is needed and the potential-free contact can be connected straight to the luminaire. A direct local connection improves system safety.

Control and monitoring via central power supply system.

More information
www.rp-group.com/en/item/FMWD009ML

TECHNICAL DATA

Luminaire type	Exit sign
Mounting	Wall mounting
Recognition distance	20 m
Pictograph	Set
Illuminant	LED
Housing material	Zinc die-cast
Housing color	White
Protection type (IP)	IP65
Impact resistance (IK)	8
Certification	Waste disposal, CE, D-sign, HACCP (food law conformity)
Insulation class	1
Supply	Centralised power supply systems
Monitoring	Central power supply (ML)
Bridging time	CPS
Battery	/
Operating mode	single luminaire switching

Input voltage AC	230 V
Input frequency	50 / 60 Hz
Input voltage DC	216 V
Power max.	5,4 W
Power maintained	5,4 W
Power non-maintained	2,8 W
Ambient temperature maintained mode	-5 °C to 40 °C
Ambient temperature non-maintained mode	-5 °C to 40 °C
Depth	58 mm
Width	262 mm
Height	188 mm
Weight	1.96
Weight incl. packaging	2.06
Connection cross-section	2.5 mm²
Switching input	Yes
Emergency light blocking	No
Battery connection	No
Dimming function	Yes
Customs tariff number	94056180
GTIN	4260349828918

TECHNICAL DRAWING

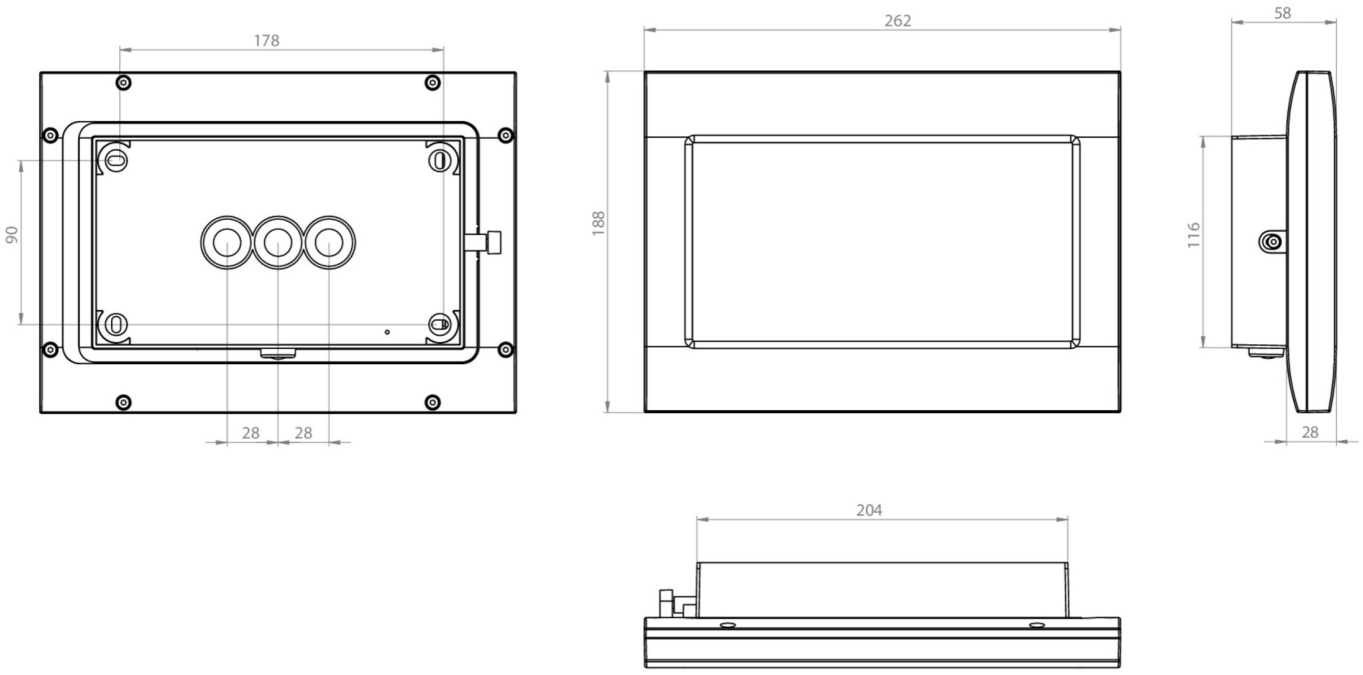

ACCESSORY LIST

FMWA001 - Surface-mounted/intermediate housing

FMFH - Wall bracket

RELATED PRODUCTS

Art.-No.	Image	Monitoring	Supply	Color	Investment	Automatic log	Maintenance level	Remote maintenance	max. luminaires	Single luminaire monitoring
FMWD009ML-AZ		Central power supply (ML)	Central power supply	RAL 7016	€€€	Yes	low	Yes	1,920 per system	central

As of: 23.11.2026 - Subject to technical changes and errors.