Art.-Nr: ZAW013SC-AZ-COOLIP54
Emergency light Self-contained
Wall mounting, SelfControl (SC), 3 h, IP65, Zinc die-cast, Anthracite

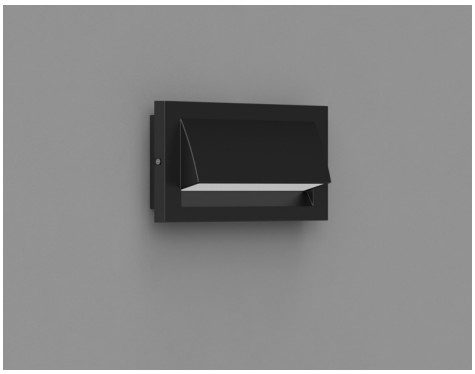

Robust wall-mounted Zinc die-cast luminaire for the lighting of escape and rescue routes in exit areas according to DIN EN 60598-1, DIN EN 60598-2-22 and EN 1838. Appealing design with concealed screws.
Available for central power systems or as a LED self-contained emergency luminaire.

The COOL light is equipped with an external battery housing for installation in the building. The installation of the lamp can be done outdoors or in cold stores.

Automatic monitoring of safety luminaire with SelfControl.

More information
www.rp-group.com/en/item/ZAW013SC-AZ-COOLIP54

TECHNICAL DATA

Luminaire type	Emergency light
Mounting	Wall mounting
Pictograph	No
Illuminant	LED
Housing material	Zinc die-cast
Housing color	Anthracite
Protection type (IP)	IP65
Impact resistance (IK)	8
Certification	Waste disposal, CE
Insulation class	1
Supply	Self-contained
Monitoring	SelfControl (SC)
Bridging time	3 h
Battery	LiFePO4 3,2 V/3,3 Ah
Operating mode	Non-maintained / maintained
Input voltage AC	230 V
Input frequency	50 / 60 Hz
Input voltage DC	- V

Power max.	4,6 W
Power maintained	3,3 W
Power non-maintained	1 W
Ambient temperature maintained mode	-25 °C to 40 °C
Ambient temperature non-maintained mode	-25 °C to 40 °C
Depth	315 mm
Width	65 mm
Height	140 mm
Weight	2.1
Weight incl. packaging	2.22
Connection cross-section	2.5 mm²
Switching input	Yes
Emergency light blocking	No
Battery connection	Connector
Dimming function	No
Luminous flux mains	190 lm
Luminous flux emergency	190 lm
Customs tariff number	94056180
GTIN	4260659564698

TECHNICAL DRAWING

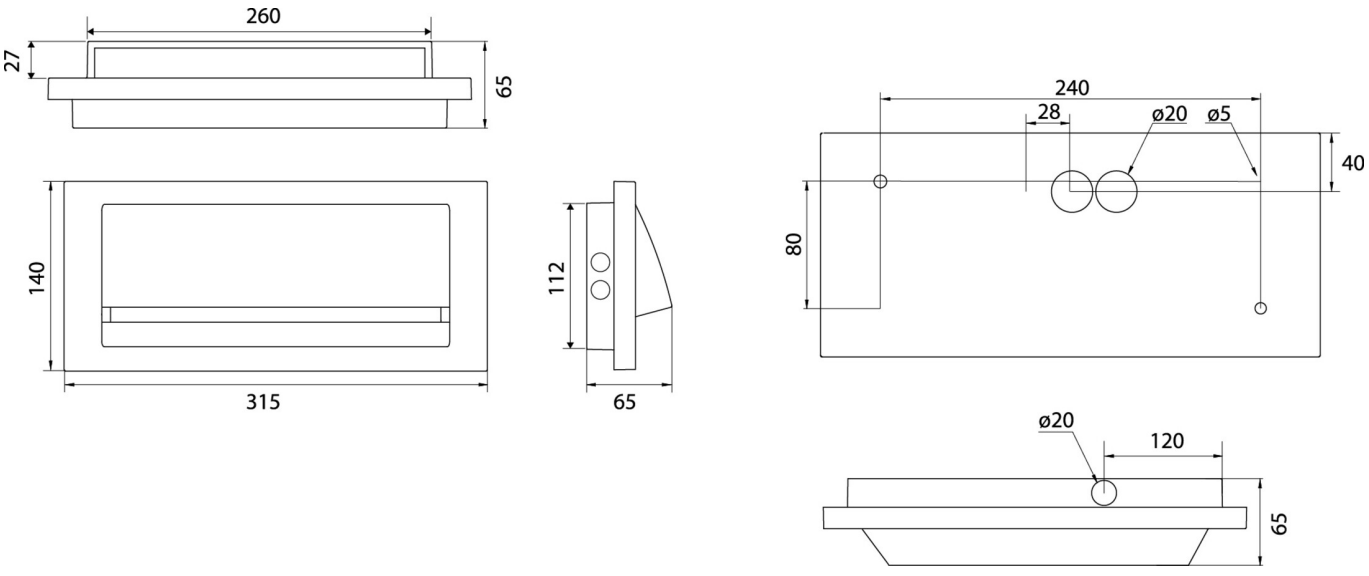

As of: 25.11.2026 - Subject to technical changes and errors.