Art.-Nr: AXEP009-E
Exit sign Centralised power supply systems Pendant recessed ceiling, Without monitoring, CPS, 30 m, IP20, Zinc die-cast, Stainless steel, Set of pictograms



Modern zinc die-cast emergency exit sign luminaire with pendant for recessed mounting in the ceiling. With an installation diameter of 68 mm, this luminaire can be easily integrated into many environments. Escape and emergency routes can be identified on either one or two sides.

It is part of the A series luminaire family, which provides solutions for any mounting and has won the German Design Award for its uniform, straight-line design.

Planning certainty is provided by tool-free, variable use of the pictograms on site. A set of pictograms corresponding to DIN ISO 7010 (arrow to the right, left, up and down) is supplied as standard.

CE

More information
www.rp-group.com/en/item/AXEP009-E

TECHNICAL DATA

Luminaire type	Exit sign
Mounting	Pendant recessed ceiling
Recognition distance	30 m
Pictograph	Set
Illuminant	LED
Housing material	Zinc die-cast
Housing color	Stainless steel
Protection type (IP)	IP20
Impact resistance (IK)	≥ 3
Certification	Waste disposal, CE
Insulation class	2
Supply	Centralised power supply systems
Monitoring	Without monitoring
Bridging time	CPS
Battery	/
Operating mode	Permanent circuit
Input voltage AC	230 V

Input frequency	50 / 60 Hz
Input voltage DC	100-254 V
Power max.	3,3 W
Power maintained	3,3 W
Power non-maintained	0 W
Ambient temperature maintained mode	-25 °C to 40 °C
Ambient temperature non-maintained mode	-25 °C to 40 °C
Depth	79 mm
Width	312 mm
Height	204 mm
Installation height	100 mm
Installation dimensions Diameter	68 mm
Weight	2.25
Weight incl. packaging	2.74
Connection cross-section	1.5 mm²
Switching input	No
Emergency light blocking	No
Battery connection	No
Dimming function	No
Customs tariff number	94056180
GTIN	4260581715816

TECHNICAL DRAWING

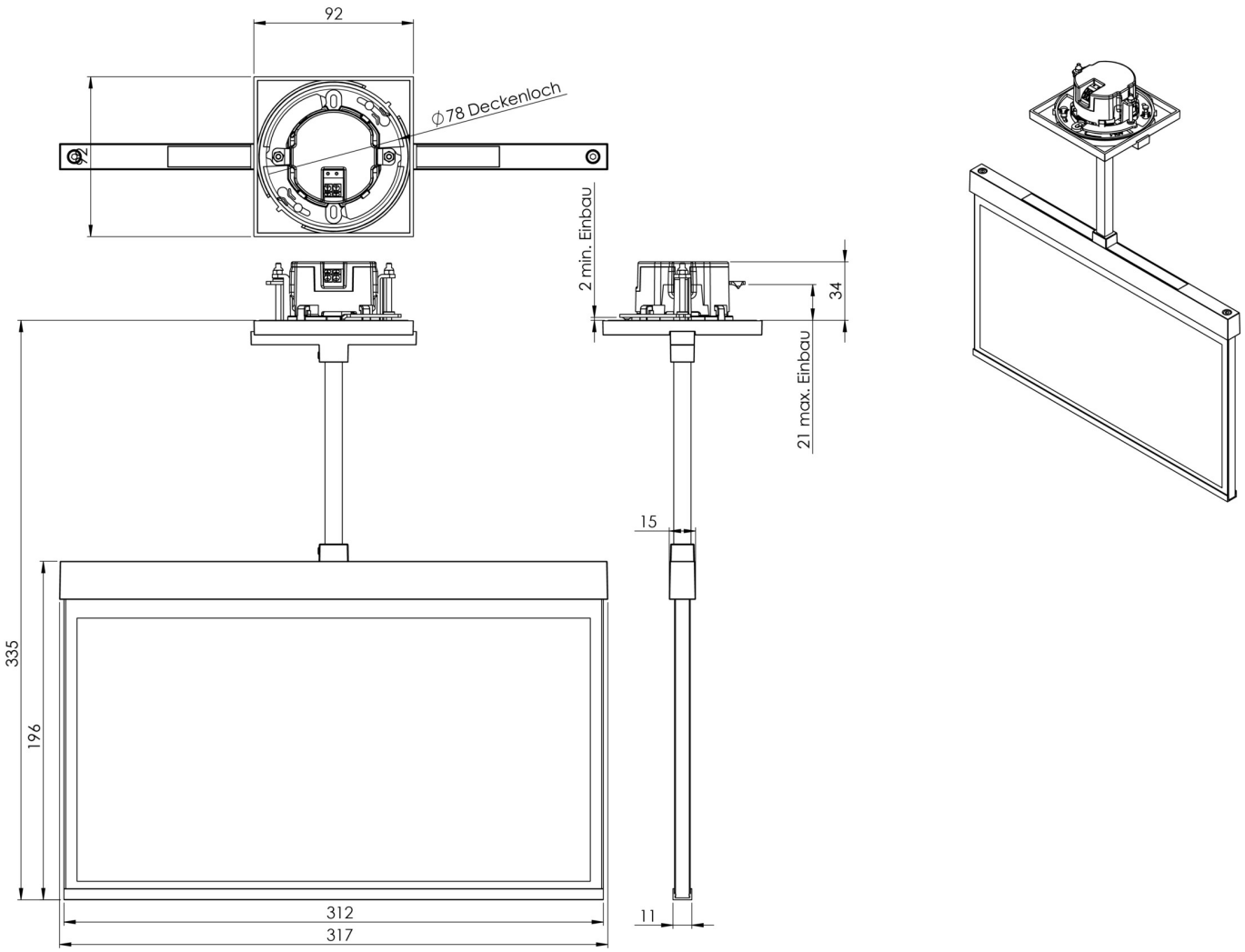

ACCESSORY LIST

AM-X-PKG - Precision ball joint for square pendulums – tilt compensation up to 23°

As of: 24.11.2026 - Subject to technical changes and errors.