RP GROUP
SOLUTIONS IN SAFETY + LIGHTING

Art.-Nr: AXEP408WL
Exit sign Self-contained
Pendant recessed ceiling, Wireless Professional (WL), 8 h, 30 m, IP20, Zinc die-cast, White, Set of pictograms



Modern zinc die-cast emergency exit sign luminaire with pendant for recessed mounting in the ceiling. With an installation diameter of 68 mm, this luminaire can be easily integrated into many environments. Escape and emergency routes can be identified on either one or two sides.

It is part of the A series luminaire family, which provides solutions for any mounting and has won the German Design Award for its uniform, straight-line design.

Wireless central control and monitoring for large installations of up to 50,000 luminaires with **Wireless Professional**. Planning certainty is provided by tool-free, variable use of the pictograms on site. A set of pictograms corresponding to DIN ISO 7010 (arrow to the right, left, up and down) is supplied as standard.

CE

JAHRE 5 YEARS GARANTIE WARRANTY

More information
www.rp-group.com/en/item/AXEP408WL

TECHNICAL DATA

Luminaire type	Exit sign
Mounting	Pendant recessed ceiling
Recognition distance	30 m
Pictograph	Set
Illuminant	LED
Housing material	Zinc die-cast
Housing color	White
Protection type (IP)	IP20
Impact resistance (IK)	≥ 3
Certification	Waste disposal, CE, 5 Years waranty
Insulation class	2
Supply	Self-contained
Monitoring	Wireless Professional (WL)
Bridging time	8 h
Battery	LiFePO4 3,2 V/1,2 Ah
Operating mode	Non-maintained / maintained

Input voltage AC	230 V
Input frequency	50 Hz
Power max.	5,6 W
Power maintained	4,5 W
Power non-maintained	0,8 W
Ambient temperature maintained mode	-5 °C to 40 °C
Ambient temperature non-maintained mode	-5 °C to 40 °C
Depth	92 mm
Width	312 mm
Height	204 mm
Installation height	100 mm
Installation dimensions Diameter	68 mm
Weight	2.32
Weight incl. packaging	2.81
Connection cross-section	2.5 mm²
Switching input	Yes
Emergency light blocking	Yes
Battery connection	Connector
Dimming function	Yes
Customs tariff number	94056180
GTIN	4260682153968

TECHNICAL DRAWING

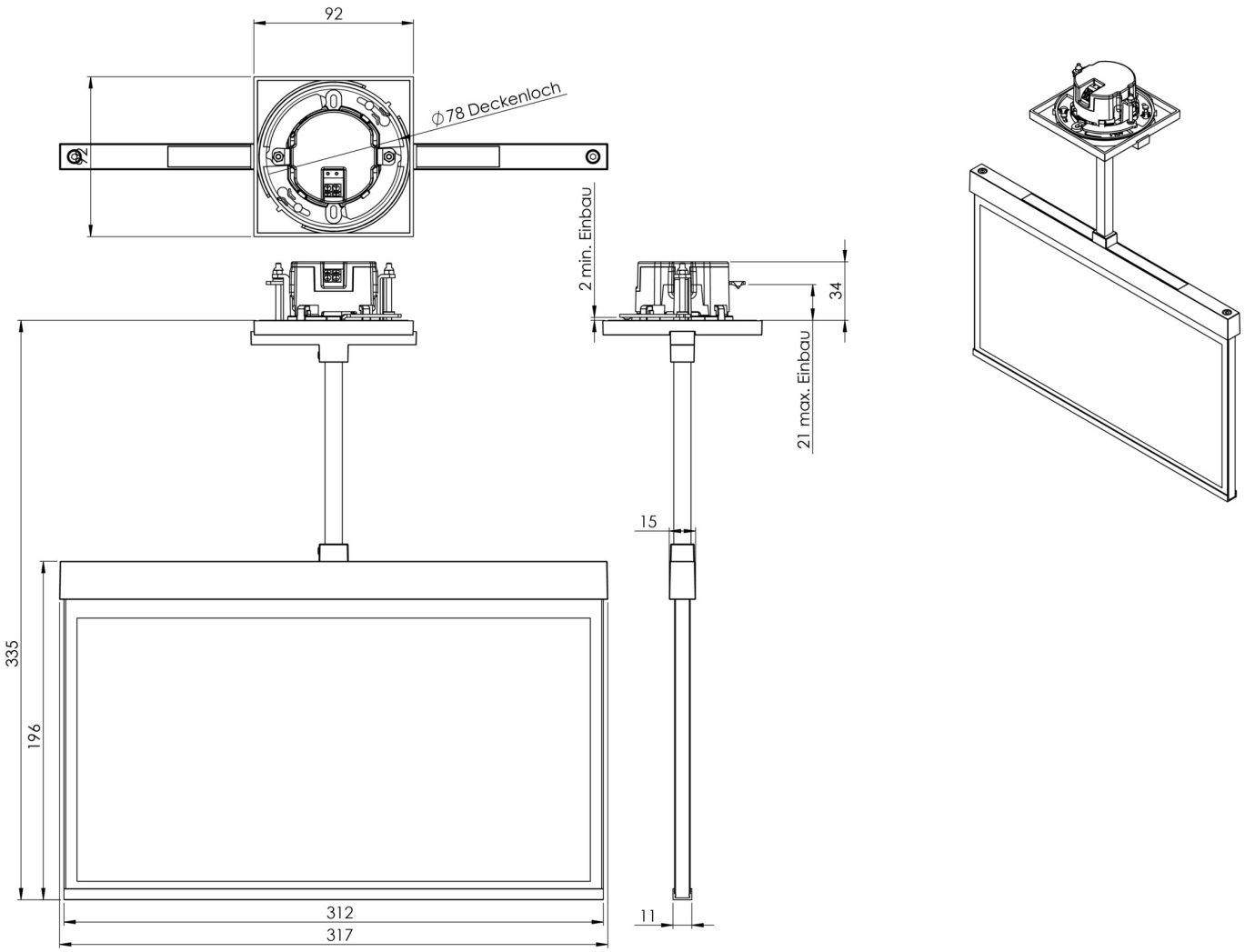

ACCESSORY LIST

AM-X-PKG-AZ - Ball joint for sloping ceiling compensation for pendant luminaires (OLED/A series)

LFPN3212-SET-2AKKU - Battery

RELATED PRODUCTS

Art.-No.	Image	Monitoring	Supply	Color	Investment	Automatic log	Maintenance level	Remote maintenance	max. luminaires	Single luminaire monitoring
AXEP408WL-AZ		Wireless Professional (WL)	self contained	RAL 7016	€€	yes	low	yes	1,000 per system	central
AXEP408WL-E		Wireless Professional (WL)	self contained	Edelstahl	€€	yes	low	yes	1,000 per system	central