## Art.-Nr: AXEP403WL
## Exit sign Self-contained
## Pendant recessed ceiling, Wireless Professional (WL), 3 h, 30 m, IP20, Zinc die-cast, White, Set of pictograms



Modern zinc die-cast emergency exit sign luminaire with pendant for recessed mounting in the ceiling. With an installation diameter of 68 mm, this luminaire can be easily integrated into many environments. Escape and emergency routes can be identified on either one or two sides.

It is part of the A series luminaire family, which provides solutions for any mounting and has won the German Design Award for its uniform, straight-line design.

Wireless central control and monitoring for large installations of up to 50,000 luminaires with **Wireless Professional**. Planning certainty is provided by tool-free, variable use of the pictograms on site. A set of pictograms corresponding to DIN ISO 7010 (arrow to the right, left, up and down) is supplied as standard.

CE

5 JAHRE 5 YEARS GARANTIE WARRANTY

More information
www.rp-group.com/en/item/AXEP403WL

## TECHNICAL DATA

| | |
|---|---|
| Luminaire type | Exit sign |
| Mounting | Pendant recessed ceiling |
| Recognition distance | 30 m |
| Pictograph | Set |
| Illuminant | LED |
| Housing material | Zinc die-cast |
| Housing color | White |
| Protection type (IP) | IP20 |
| Impact resistance (IK) | ≥ 3 |
| Certification | Waste disposal, CE, 5 Years waranty |
| Insulation class | 2 |
| Supply | Self-contained |
| Monitoring | Wireless Professional (WL) |
| Bridging time | 3 h |
| Battery | LiFePO4 3,2 V/1,2 Ah |
| Operating mode | Non-maintained / maintained |

| | |
|---|---|
| Input voltage AC | 230 V |
| Input frequency | 50 Hz |
| Power max. | 5,6 W |
| Power maintained | 4,5 W |
| Power non-maintained | 0,8 W |
| Ambient temperature maintained mode | -5 °C to 40 °C |
| Ambient temperature non-maintained mode | -5 °C to 40 °C |
| Depth | 92 mm |
| Width | 312 mm |
| Height | 204 mm |
| Installation height | 100 mm |
| Installation dimensions Diameter | 68 mm |
| Weight | 2.32 |
| Weight incl. packaging | 2.81 |
| Connection cross-section | 2.5 mm² |
| Switching input | Yes |
| Emergency light blocking | Yes |
| Battery connection | Connector |
| Dimming function | Yes |
| Customs tariff number | 94056180 |
| GTIN | 4260682153944 |

## TECHNICAL DRAWING

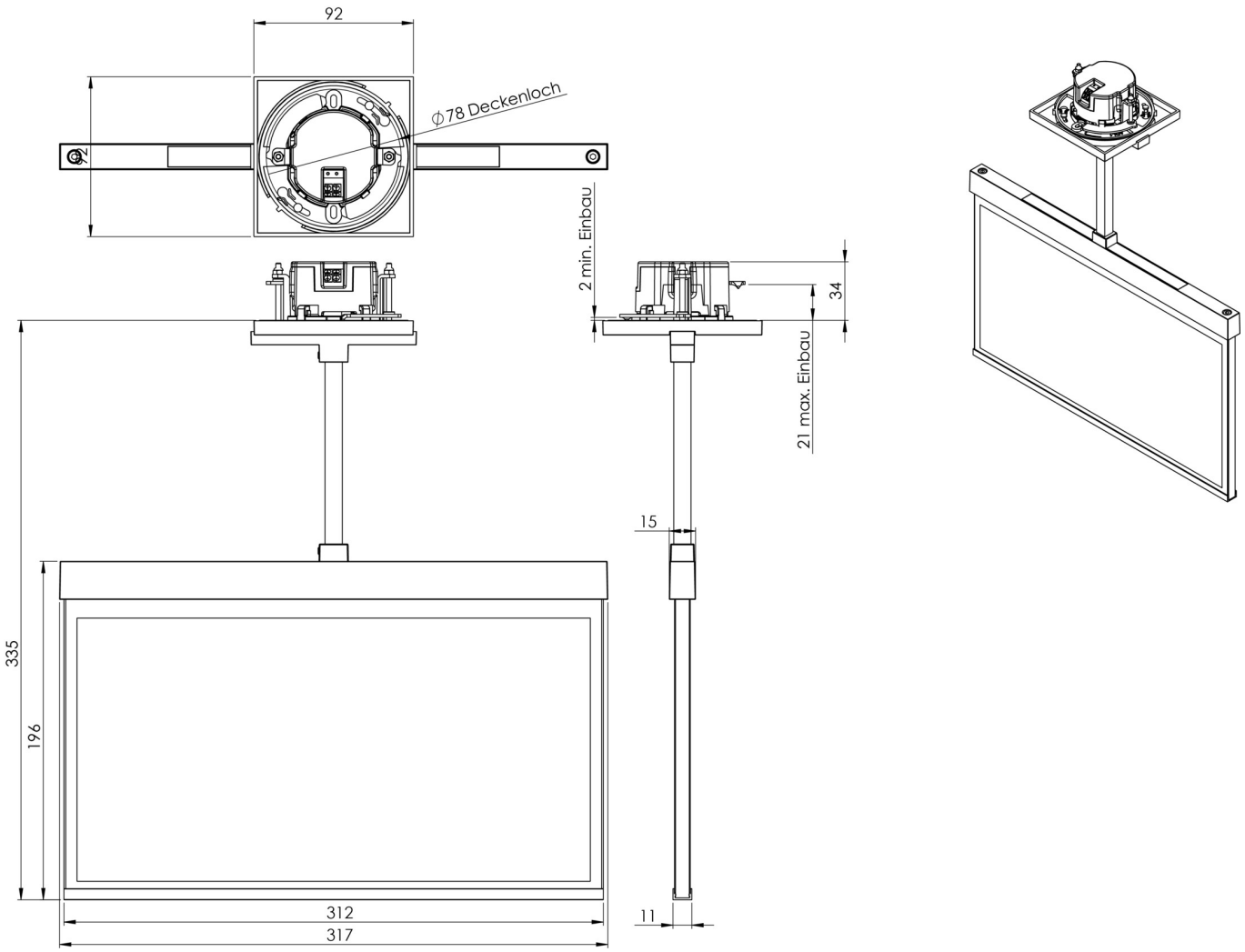


## ACCESSORY LIST

AM-X-PKG-AZ - Ball joint for sloping ceiling compensation for pendant luminaires (OLED/A series)

LFPN3212-SET-2AKKU - Battery

## RELATED PRODUCTS

| Art.-No. | Image | Monitoring | Supply | Color | Investment | Automatic log | Maintenance level | Remote maintenance | max. luminaires | Single luminaire monitoring |
|---|---|---|---|---|---|---|---|---|---|---|
| AXEP403WL-AZ |  | Wireless Professional (WL) | self contained | RAL 7016 | €€ | yes | low | yes | 1,000 per system | central |
| AXEP403WL-E |  | Wireless Professional (WL) | self contained | Edelstahl | €€ | yes | low | yes | 1,000 per system | central |