RP GROUP
SOLUTIONS IN SAFETY + LIGHTING

Art.-Nr: AXCP509CC
Exit sign Centralised power supply systems Pendant recessed ceiling, CoreCompact 24 (CC), CPS, 30 m, IP20, Zinc die-cast, White, Set of pictograms



Modern zinc die-cast emergency exit sign luminaire with pendant for recessed mounting in the ceiling. Escape and emergency routes can be identified on either one or two sides.

It is part of the A series luminaire family, which provides solutions for any mounting and has won the German Design Award for its uniform, straight-line design.

Control and monitoring via central 24 V low-power system. Planning certainty is provided by tool-free, variable use of the pictograms on site. A set of pictograms corresponding to DIN ISO 7010 (arrow to the right, left, up and down) is supplied as standard.

CE

More information
www.rp-group.com/en/item/AXCP509CC

TECHNICAL DATA

Luminaire type	Exit sign
Mounting	Pendant recessed ceiling
Recognition distance	30 m
Pictograph	Set
Illuminant	LED
Housing material	Zinc die-cast
Housing color	White
Protection type (IP)	IP20
Impact resistance (IK)	≥ 3
Certification	Waste disposal, CE
Insulation class	2
Supply	Centralised power supply systems
Monitoring	CoreCompact 24 (CC)
Bridging time	CPS
Battery	/
Operating mode	Non-maintained / maintained
Input voltage AC	24 V



RP GROUP
SOLUTIONS IN SAFETY + LIGHTING

Power max.	3,4 W
Power maintained	3,4 W
Power non-maintained	0,4 W
Ambient temperature maintained mode	-5 °C to 40 °C
Ambient temperature non-maintained mode	-5 °C to 40 °C
Depth	79 mm
Width	317 mm
Height	205 mm
Installation length	176 mm
Installation width	68 mm
Installation height	40 mm
Weight	1.72
Weight incl. packaging	2.21
Connection cross-section	2.5 mm²
Switching input	No
Emergency light blocking	No
Battery connection	No
Luminous flux mains	230 lm
Luminous flux emergency	230 lm
Customs tariff number	94056180
GTIN	4260682156662

TECHNICAL DRAWING

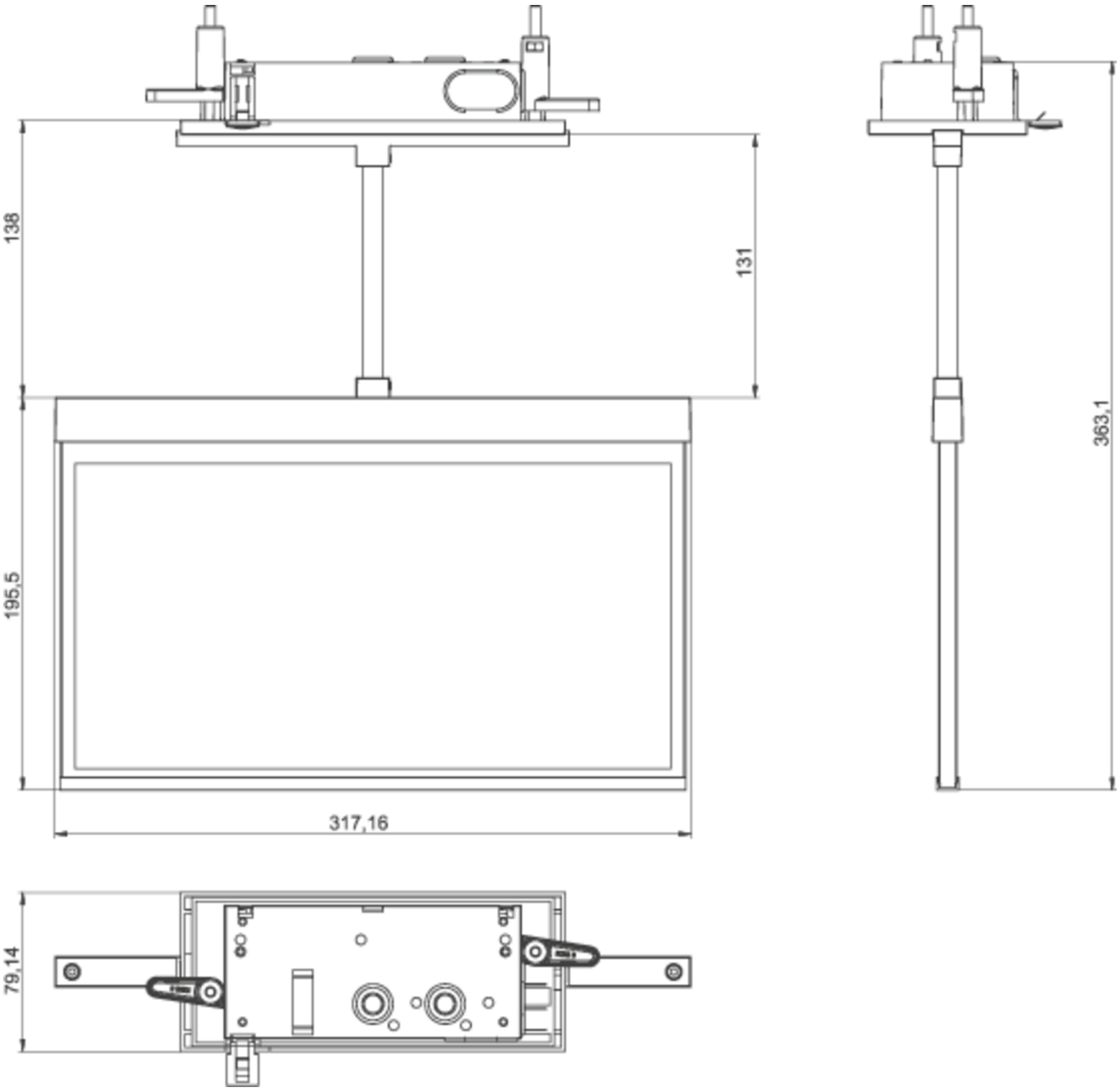

ACCESSORY LIST

AM-XBE - Flush-mounted box

AM-X-PKG - Precision ball joint for square pendulums – tilt compensation up to 23°

RELATED PRODUCTS

Art.-No.	Image	Monitoring	Supply	Color	Investment	Automatic log	Maintenance level	Remote maintenance	max. luminaires	Single luminaire monitoring
AXCP009ML		Central power supply (ML)	Central power supply	RAL 9003	€€€	Yes	low	Yes	1,920 per system	central
AXCP009ML-AZ		Central power supply (ML)	Central power supply	RAL 7016	€€€	Yes	low	Yes	1,920 per system	central
AXCP009ML-E		Central power supply (ML)	Central power supply	Edelstahl	€€€	Yes	low	Yes	1,920 per system	central
AXCP509CC-AZ		CoreCompact 24 (CC)	Central power supply	RAL 7016	€€	Yes	low	Yes		central
AXCP509CC-E		CoreCompact 24 (CC)	Central power supply	Edelstahl	€€	Yes	low	Yes		central