RP GROUP
SOLUTIONS IN SAFETY + LIGHTING

Art.-Nr: FMW509CC
Exit sign Centralised power supply systems
Wall mounting, CPS, 20 m, IP65, Zinc die-cast, White, Set of pictograms

Robust zinc die-cast emergency exit sign luminaire for mounting on the wall and for identifying emergency and escape routes.

The pictogram is fitted on the inside where it is protected by a transparent pane.

Control and monitoring via central 24 V low-power system. Planning certainty is provided by tool-free, variable use of the pictograms on site. A set of pictograms corresponding to DIN ISO 7010 (arrow to the right, left, up and down) is supplied as standard.

More information
www.rp-group.com/en/item/FMW509CC

TECHNICAL DATA

Luminaire type	Exit sign
Mounting	Wall mounting
Recognition distance	20 m
Pictograph	Set
Illuminant	LED
Housing material	Zinc die-cast
Housing color	White
Protection type (IP)	IP65
Impact resistance (IK)	8
Certification	WEEE, CE, D-Sign, HACCP
Insulation class	3
Supply	Centralised power supply systems
Monitoring	CoreCompact 24 (CC)
Bridging time	CPS
Battery	/
Operating mode	Non-maintained / maintained
Input voltage AC	24 V
Power max.	2,8 W
Power maintained	2,8 W

Power non-maintained	0,4 W
Ambient temperature maintained mode	-20 °C to 40 °C
Ambient temperature non-maintained mode	-20 °C to 40 °C
Depth	58 mm
Width	262 mm
Height	188 mm
Weight	1.89
Weight incl. packaging	1.99
Connection cross-section	2.5 mm²
Switching input	No
Emergency light blocking	No
Battery connection	No
Customs tariff number	94056180
GTIN	4260682157133

TECHNICAL DRAWING

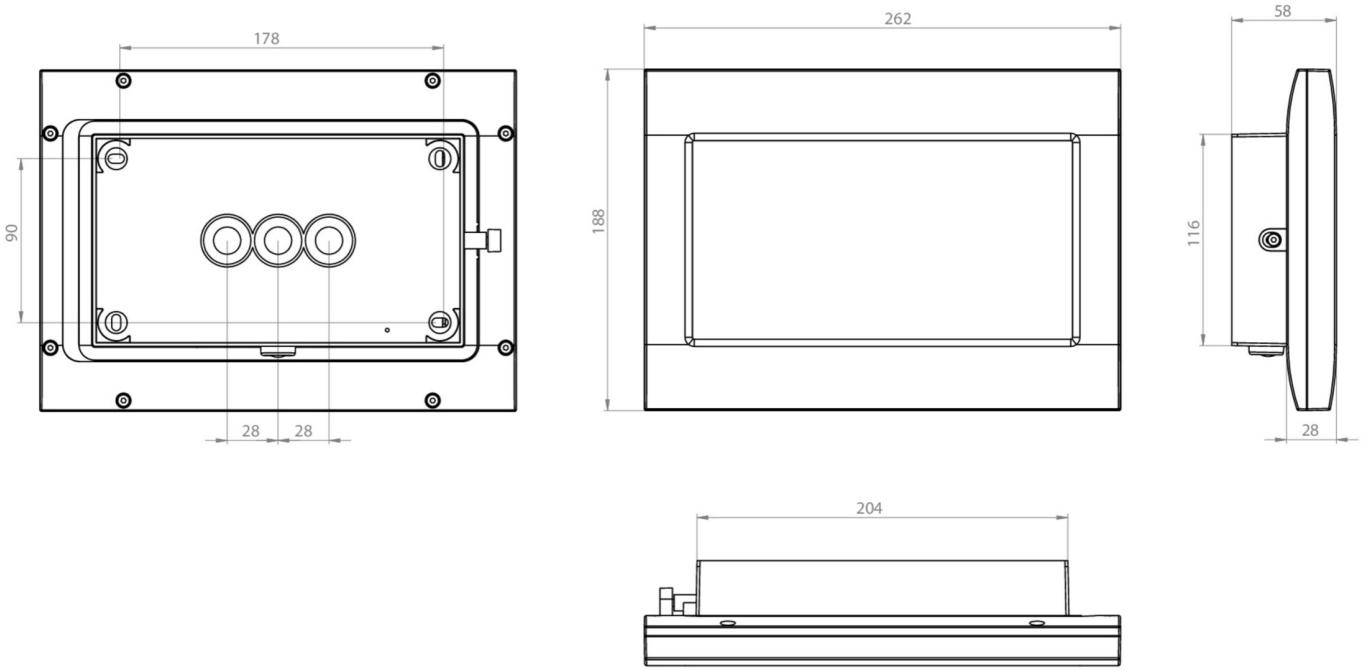

ACCESSORY LIST

FMWA001 -

FMDA001 - Ceiling bracket, one-sided, white - Professional bracket for FM emergency lights

FMDA002-AZ - Double-sided ceiling bracket for emergency lighting - anthracite, FM-compatible

FMFH -

FMDA001-AZ - High-quality ceiling bracket for FM luminaires, one-sided, anthracite

FMDA002 - Professional ceiling bracket (double-sided) for FM emergency lights, white

RELATED PRODUCTS

Art.-No.	Image	Monitoring	Supply	Color	Investment	Automatic log	Maintenance level	Remote maintenance	max. luminaires	Single luminaire monitoring
FMW009ML		Central power supply (ML)	Central power supply	RAL 9003	€€€	Yes	low	Yes	1,920 per system	central
FMW009ML-AZ		Central power supply (ML)	Central power supply	RAL 7016	€€€	Yes	low	Yes	1,920 per system	central
FMW509CC-AZ		CoreCompact 24 (CC)	Central power supply	RAL 7016	€€	Yes	low	Yes		central

As of: 10.07.2026 - Subject to technical changes and errors.