RP GROUP
SOLUTIONS IN SAFETY + LIGHTING

Art.-Nr: ZAW519CC-AZ
Emergency light Centralised power supply systems Wall mounting, CoreCompact 24 (CC), CPS, IP65, Zinc die-cast, Anthracite



Robust, zinc die-cast wall surface-mounted luminaire for illuminating escape and emergency routes.

Particularly suited to illuminating escape and emergency routes at the exit and outside the building up to a safe zone. The radiating characteristics distribute the light parallel to the wall.

Control and monitoring via central 24 V low-power system.

More information
www.rp-group.com/en/item/ZAW519CC-AZ

TECHNICAL DATA

Luminaire type	Emergency light
Mounting	Wall mounting
Pictograph	No
Illuminant	LED
Housing material	Zinc die-cast
Housing color	Anthracite
Protection type (IP)	IP65
Impact resistance (IK)	8
Certification	Waste disposal, CE, D-sign
Insulation class	3
Supply	Centralised power supply systems
Monitoring	CoreCompact 24 (CC)
Bridging time	CPS
Battery	/
Operating mode	Non-maintained / maintained
Input voltage AC	24 V
Power max.	2,1 W
Power maintained	2,1 W
Power non-maintained	0,4 W

Ambient temperature maintained mode	-5 °C to 40 °C
Ambient temperature non-maintained mode	-5 °C to 40 °C
Depth	315 mm
Width	65 mm
Height	140 mm
Weight	1.96
Weight incl. packaging	2.08
Connection cross-section	2.5 mm²
Switching input	No
Emergency light blocking	No
Battery connection	No
Dimming function	Yes
Luminous flux mains	220 lm
Luminous flux emergency	220 lm
Customs tariff number	94056180
GTIN	4260682157683

TECHNICAL DRAWING

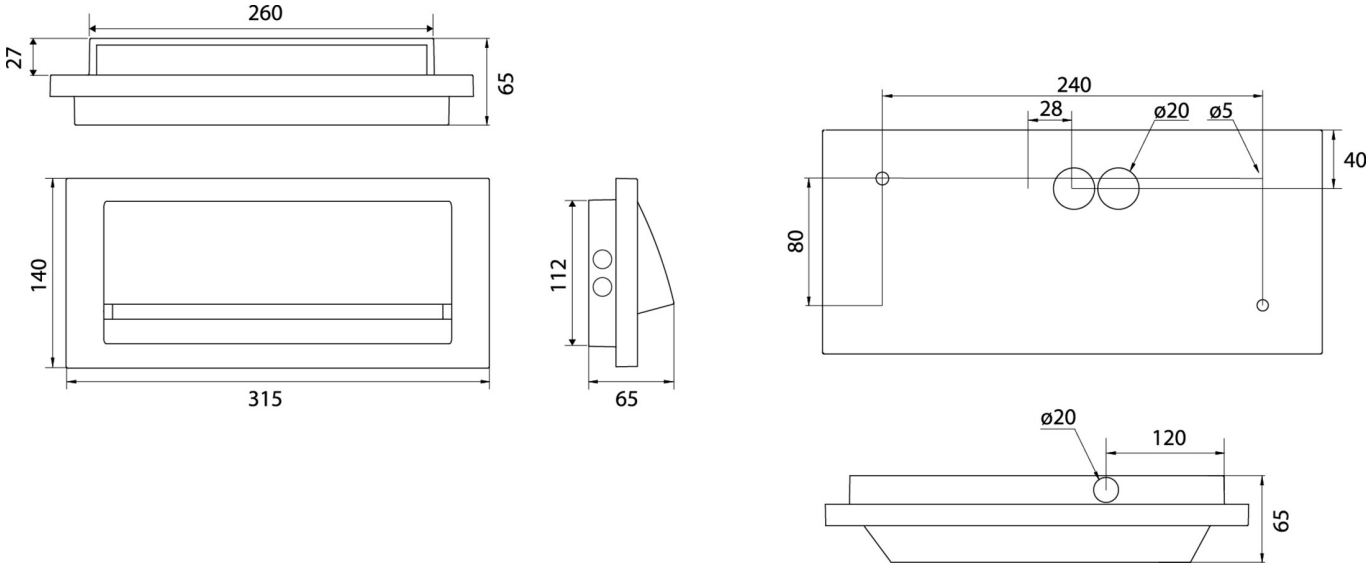

As of: 23.11.2026 - Subject to technical changes and errors.