Art.-Nr: KMMU011WB
Exit sign Self-contained Universal, Wireless Basic (WB), 1 h, 24 m, IP43, Polycarbonate, White, Set of pictograms, Universal mounting



Slim convex emergency exit sign luminaire with clear, closed surround, which tapers downwards in a continuous and symmetrical manner. Suited to inscription on one or two sides. The pictograms are on the inside and are inserted without the use of solvents.

Thanks to the snap-in mechanism between the upper and lower part, the luminaire has a harmonious look and appears closed all the way round. The luminaire is connected to the mains in the ceiling section. When closed, the luminaire is powered via contact plugs. This greatly simplifies mounting and makes convenient connection possible despite the small size of the luminaire.

Wireless control and monitoring for small installations of up to 50 luminaires with Wireless Basic. Planning certainty is provided by tool-free, variable use of the pictograms on site. A set of pictograms corresponding to DIN ISO 7010 (arrow to the right, left, up and down) is supplied as standard. Universal mounting includes fitting on the wall and ceiling as well as the option of fitting in the ceiling in conjunction with the mounting frame available.

CE

More information
www.rp-group.com/en/item/KMMU011WB

TECHNICAL DATA

Luminaire type	Exit sign
Mounting	Universal
Recognition distance	24 m
Pictograph	Set
Illuminant	LED
Housing material	Polycarbonate
Housing color	White
Protection type (IP)	IP43
Impact resistance (IK)	3
Certification	Waste disposal, CE
Insulation class	2
Supply	Self-contained
Monitoring	Wireless Basic (WB)

Bridging time	1 h
Battery	LiFePO4 3,2 V/3,3 Ah
Operating mode	Non-maintained / maintained
Input voltage AC	230 V
Input frequency	50 / 60 Hz
Input voltage DC	- V
Power max.	5,3 W
Power maintained	3,9 W
Power non-maintained	1,5 W
Ambient temperature maintained mode	-5 °C to 40 °C
Ambient temperature non-maintained mode	-5 °C to 40 °C
Depth	35 mm
Width	251 mm
Height	173 mm
Weight	0.7
Weight incl. packaging	0.8
Connection cross-section	2.5 mm²
Switching input	Yes
Emergency light blocking	No
Battery connection	Connector
Dimming function	No
Luminous flux mains	190 lm
Luminous flux emergency	190 lm
Customs tariff number	94056120
GTIN	4260659566586

TECHNICAL DRAWING

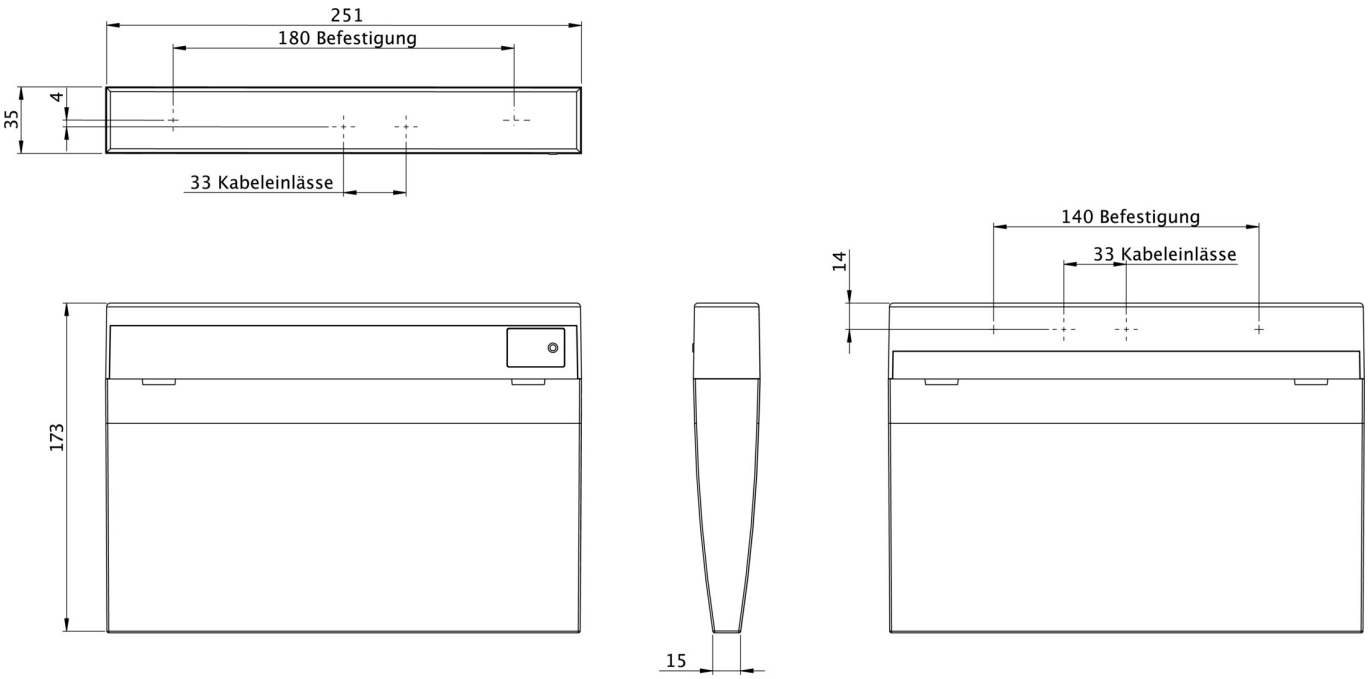

ACCESSORY LIST

DSA - Wire suspension

KME-EB - Mounting frame

KMBE - Concrete-mounted box

AWKSU - Wall bracket

2PW-EB - Pendant

BALLPLX-KMU.01 - Ball impact-resistant protective cover (PMMA) transparent for lights - KMU, KSU und ASMU

LFP3233.01 - Battery

RELATED PRODUCTS

Art.-No.	Image	Monitoring	Supply	Color	Investment	Automatic log	Maintenance level	Remote maintenance	max. luminaires	Single luminaire monitoring
KMMU011SC		SelfControl (SC)	Single battery	RAL 9003	€	no	high	no	unlimited	itself
KMMU011WL		Wireless Professional (WL)	self contained	RAL 9003	€€	yes	low	yes	1,000 per system	central

As of: 24.11.2026 - Subject to technical changes and errors.