Art.-Nr: IADL529CC
Emergency light Centralised power supply systems Surface mounting, CoreCompact 24 (CC), CPS, IP40, Zinc die-cast, White

The compact IADL LED emergency light made of die-cast zinc is designed for connection to CC24 central battery systems. The innovative integrated lens holder with quick-mounting device allows flexible use of different lens types depending on the application. Round and corridor lenses are included with every light, enabling perfect adaptation to the respective mounting situation.

Control and monitoring via central 24 V low-power system.



More information
www.rp-group.com/en/item/IADL529CC

TECHNICAL DATA

Luminaire type	Emergency light
Mounting	Surface mounting
Pictograph	No
Illuminant	LED
Housing material	Zinc die-cast
Housing color	White
Protection type (IP)	IP40
Impact resistance (IK)	6
Certification	CE, Waste disposal
Insulation class	3
Supply	Centralised power supply systems
Monitoring	CoreCompact 24 (CC)
Bridging time	CPS
Battery	/
Operating mode	Non-maintained / maintained
Input voltage AC	24 V
Power max.	1,5 W
Power maintained	1,5 W

Power non-maintained	0,4 W
Ambient temperature maintained mode	-5 °C to 40 °C
Ambient temperature non-maintained mode	-5 °C to 40 °C
Height	44 mm
Diameter	57 mm
Weight	0.18
Weight incl. packaging	0.21
Connection cross-section	2.5 mm²
Switching input	No
Emergency light blocking	No
Battery connection	No
Dimming function	Yes
Luminous flux mains	140 lm
Luminous flux emergency	140 lm
Customs tariff number	94056180
GTIN	4260682159533

TECHNICAL DRAWING

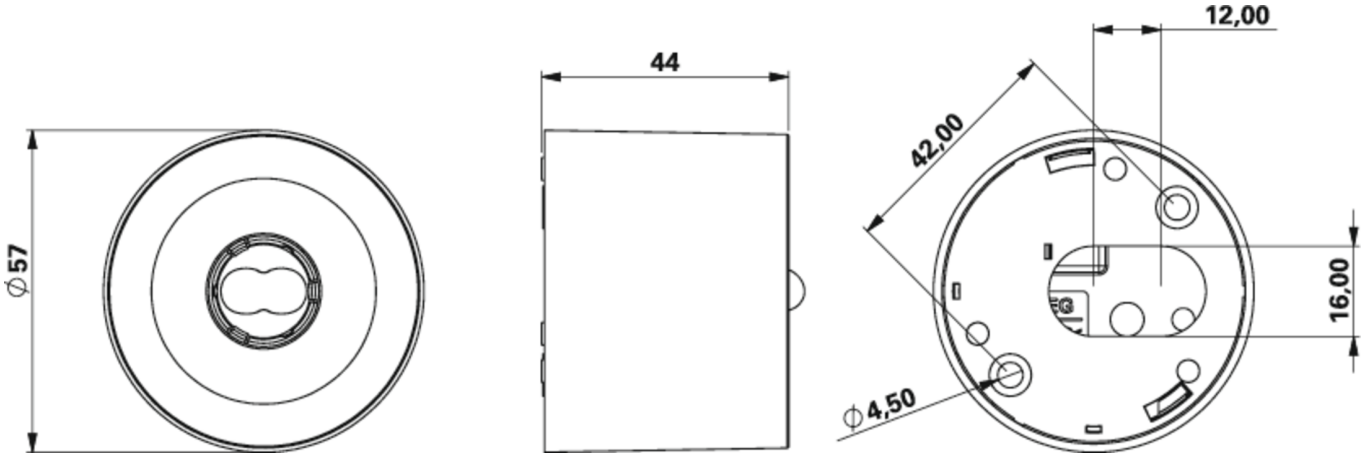

As of: 28.11.2026 - Subject to technical changes and errors.