RP GROUP
SOLUTIONS IN SAFETY + LIGHTING

Art.-Nr: QBW423SC
General light, Emergency light Self-contained Universal, SelfControl (SC), 3 h, IP44, Polycarbonate, White

Round plastic LED general-purpose luminaire, as combined safety luminaire in a timeless design.

Alongside the general-purpose lighting, it also includes an integrated safety light function. When mounting, the emergency light LED can be swung out without the need for tools, to perfectly illuminate the escape and emergency routes when mounted on a wall, for example.

Automatic monitoring of safety luminaire with SelfControl.

More information
www.rp-group.com/en/item/QBW423SC

TECHNICAL DATA

Luminaire type	General light, Emergency light
Mounting	Universal
Pictograph	No
Illuminant	LED
Housing material	Polycarbonate
Housing color	White
Protection type (IP)	IP44
Impact resistance (IK)	6
Certification	Waste disposal, CE, 5 Years waranty
Insulation class	2
Supply	Self-contained
Monitoring	SelfControl (SC)
Bridging time	3 h
Battery	LiFePO4 3,2 V/3,3 Ah
Operating mode	Non-maintained / maintained
Input voltage AC	180 V - 250 V
Input frequency	50 Hz
Power max.	8,2 W
Power maintained	7 W

Power non-maintained	2 W
Ambient temperature maintained mode	-5 °C to 40 °C
Ambient temperature non-maintained mode	-5 °C to 40 °C
Height	98 mm
Diameter	339 mm
Weight	1.55
Weight incl. packaging	1.77
Connection cross-section	2,5 mm²
Switching input	Yes
Emergency light blocking	No
Battery connection	Connector
Dimming function	No
Luminous flux mains	1800 lm
Luminous flux emergency	470 lm
EOF	0.26
Customs tariff number	94056180
GTIN	4260766558405

RP GROUP
SOLUTIONS IN SAFETY + LIGHTING

TECHNICAL DRAWING

QBW

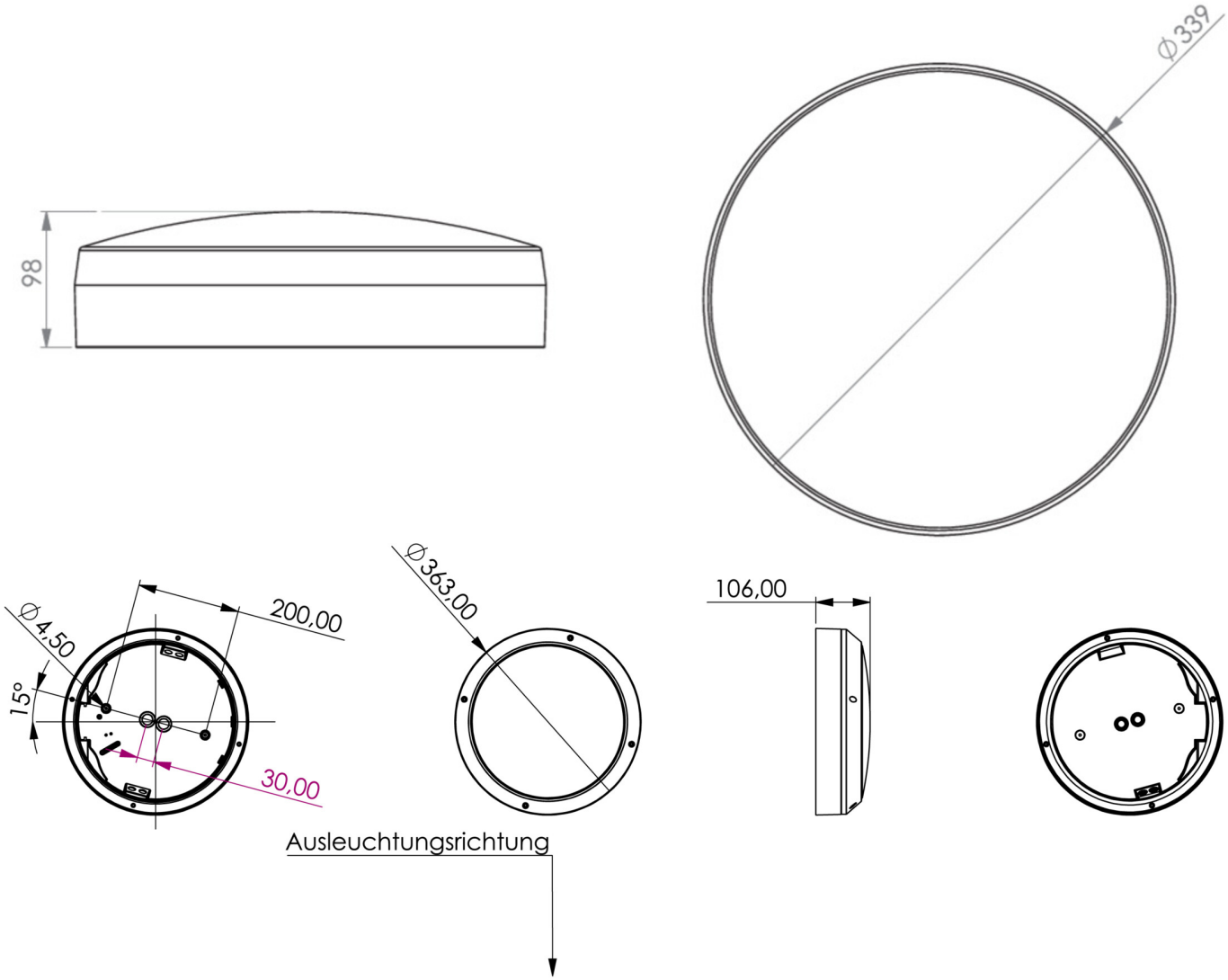
98
Ø339
Ø4,50
200,00
15°
30,00
Ø363,00
106,00
Ausleuchtungsrichtung

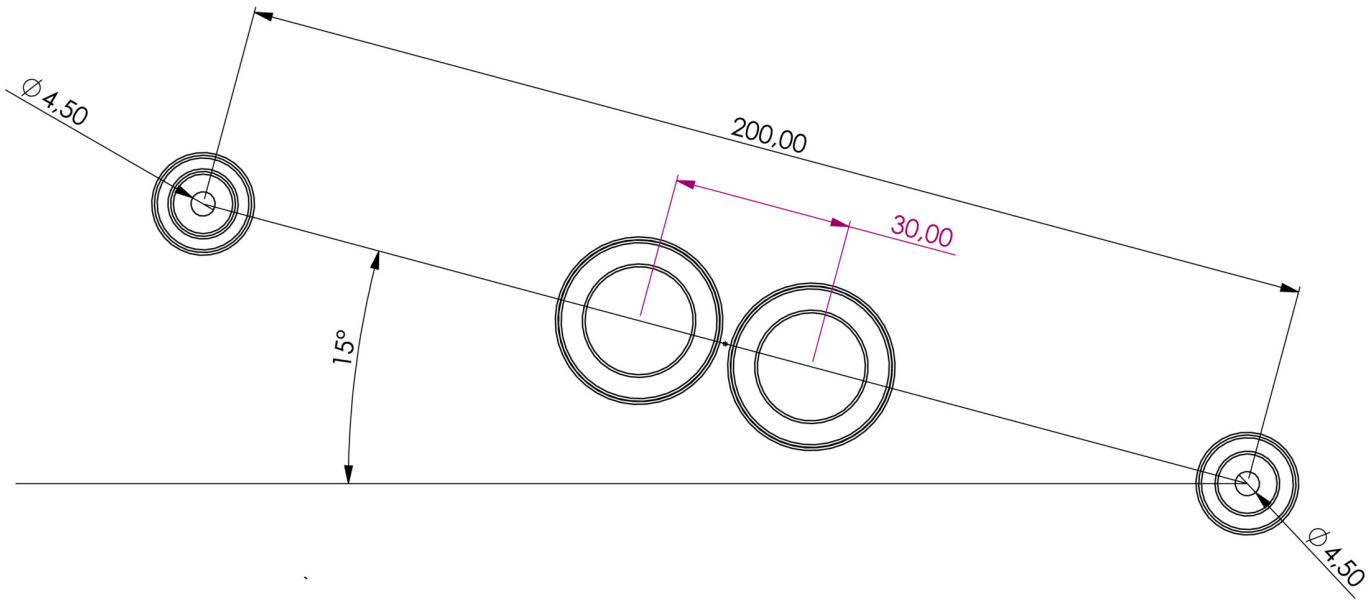

As of: 14.10.2026 - Subject to technical changes and errors.