RP GROUP
SOLUTIONS IN SAFETY + LIGHTING

Art.-Nr: ZAW418SC-TT
Emergency light Self-contained
Wall mounting, SelfControl (SC), 8 h, IP65, Zinc die-cast, White, low-temperature batteries



Robust, zinc die-cast wall surface-mounted luminaire for illuminating escape and emergency routes near exits in accordance with DIN EN 60598-1, DIN EN 60598-2-22 and DIN EN 1838.
Concealed screw connection for an attractive design. Available as luminaire with a central battery system or LED single battery.

Automatic monitoring of safety luminaire with SelfControl. The designation "TT" stands for low-temperature batteries. These special lithium iron phosphate batteries are designed to function reliably even at low temperatures. They offer stable performance and a long lifespan, even under demanding conditions.

CE 5 JAHRE 5 YEARS GARANTIE WARRANTY D

More information
www.rp-group.com/en/item/ZAW418SC-TT

TECHNICAL DATA

Luminaire type	Emergency light
Mounting	Wall mounting
Pictograph	No
Illuminant	LED
Housing material	Zinc die-cast
Housing color	White
Protection type (IP)	IP65
Impact resistance (IK)	8
Certification	Waste disposal, CE, 5 Years waranty, D-sign
Insulation class	1
Supply	Self-contained
Monitoring	SelfControl (SC)
Bridging time	8 h
Battery	LiFePO4 3,2 V/3,3 Ah
Operating mode	Non-maintained / maintained
Input voltage AC	230 V
Input frequency	50 / 60 Hz

Input voltage DC	- V
Power max.	4,6 W
Power maintained	3,3 W
Power non-maintained	1 W
Ambient temperature maintained mode	-25 °C to 40 °C
Ambient temperature non-maintained mode	-25 °C to 40 °C
Depth	315 mm
Width	65 mm
Height	140 mm
Weight	2.11
Weight incl. packaging	2.23
Connection cross-section	2.5 mm²
Switching input	Yes
Emergency light blocking	No
Battery connection	Connector
Dimming function	No
Luminous flux mains	190 lm
Luminous flux emergency	85 lm
Customs tariff number	94056180
GTIN	4260766558009

TECHNICAL DRAWING

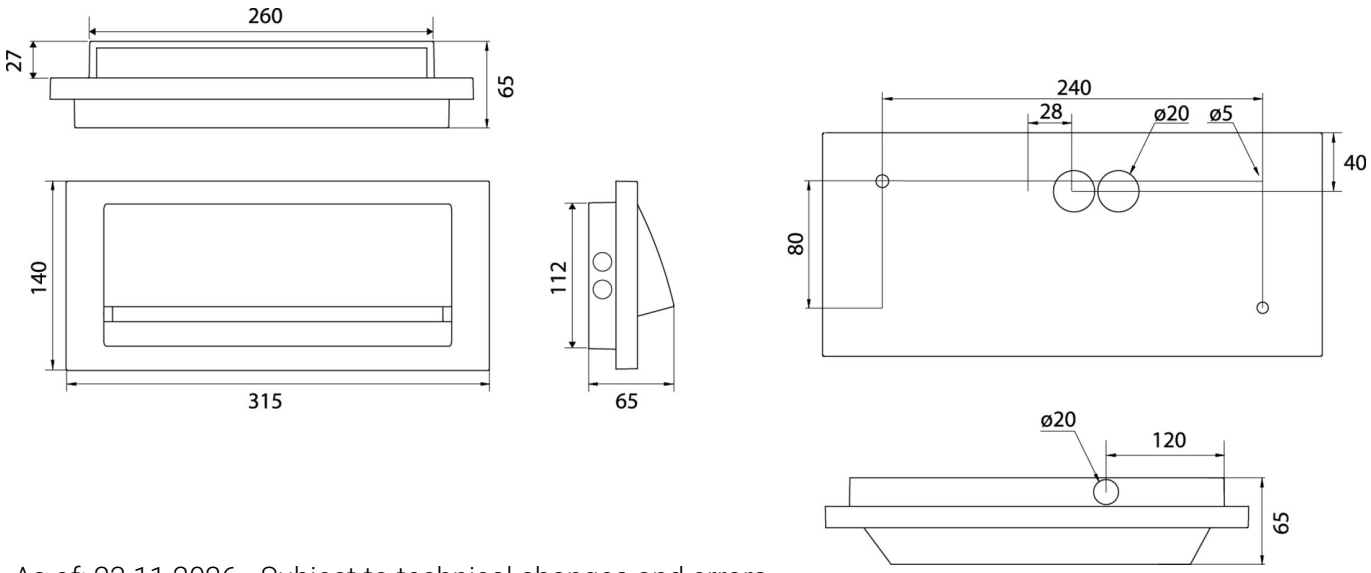

As of: 23.11.2026 - Subject to technical changes and errors.