## Art.-Nr: ZAW413SC-TT-AZ
## Emergency light Self-contained
## Wall mounting, SelfControl (SC), 3 h, IP65, Zinc die-cast, Anthracite, low-temperature batteries

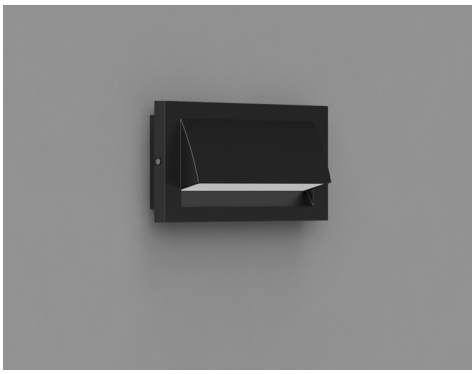

Robust, zinc die-cast wall surface-mounted luminaire for illuminating escape and emergency routes near exits in accordance with DIN EN 60598-1, DIN EN 60598-2-22 and DIN EN 1838.
Concealed screw connection for an attractive design. Available as luminaire with a central battery system or LED single battery.

Automatic monitoring of safety luminaire with SelfControl. The designation "TT" stands for **low-temperature batteries**. These special **lithium iron phosphate batteries** are designed to function reliably even at low temperatures. They offer stable performance and a long lifespan, even under demanding conditions.

More information
www.rp-group.com/en/item/ZAW413SC-TT-AZ

## TECHNICAL DATA

| | |
|---|---|
| Luminaire type | Emergency light |
| Mounting | Wall mounting |
| Pictograph | No |
| Illuminant | LED |
| Housing material | Zinc die-cast |
| Housing color | Anthracite |
| Protection type (IP) | IP65 |
| Impact resistance (IK) | 8 |
| Certification | Waste disposal, CE, 5 Years waranty, D-sign |
| Insulation class | 1 |
| Supply | Self-contained |
| Monitoring | SelfControl (SC) |
| Bridging time | 3 h |
| Battery | LiFePO4 3,2 V/3,3 Ah |
| Operating mode | Non-maintained / maintained |
| Input voltage AC | 230 V |
| Input frequency | 50 / 60 Hz |

| | |
|---|---|
| Input voltage DC | - V |
| Power max. | 4,6 W |
| Power maintained | 3,3 W |
| Power non-maintained | 1 W |
| Ambient temperature maintained mode | -25 °C to 40 °C |
| Ambient temperature non-maintained mode | -25 °C to 40 °C |
| Depth | 315 mm |
| Width | 65 mm |
| Height | 140 mm |
| Weight | 2.11 |
| Weight incl. packaging | 2.23 |
| Connection cross-section | 2.5 mm² |
| Switching input | Yes |
| Emergency light blocking | No |
| Battery connection | Connector |
| Dimming function | No |
| Luminous flux mains | 190 lm |
| Luminous flux emergency | 190 lm |
| Customs tariff number | 94056180 |
| GTIN | 4260766557958 |

## TECHNICAL DRAWING

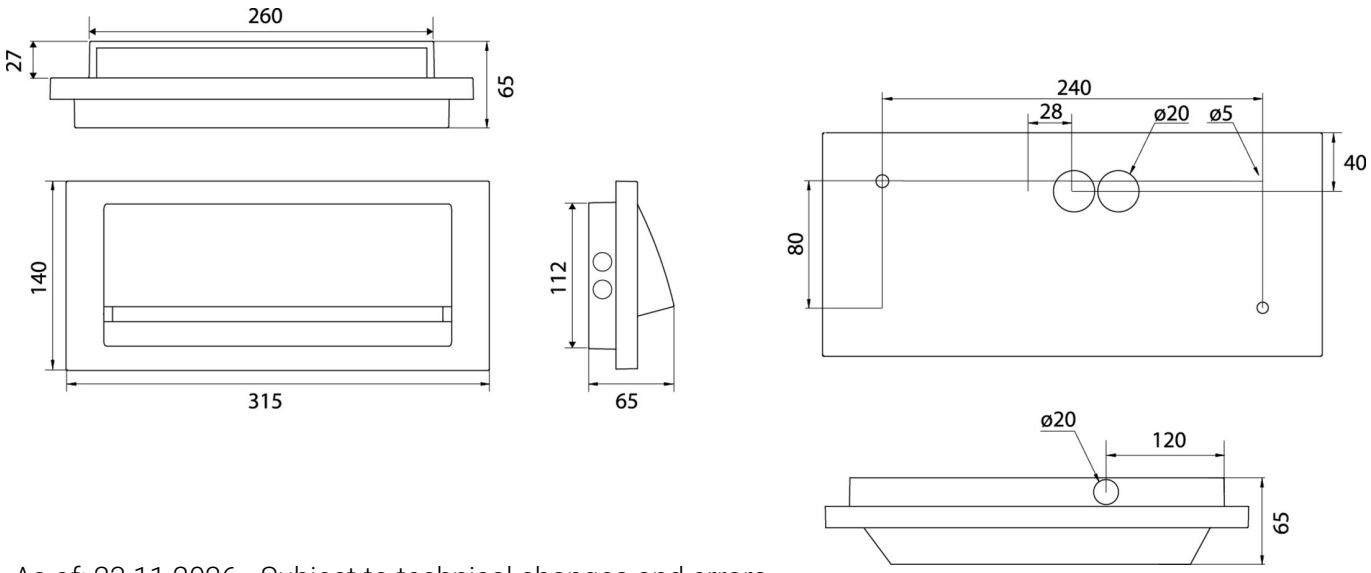


As of: 23.11.2026 - Subject to technical changes and errors.