RP GROUP
SOLUTIONS IN SAFETY + LIGHTING

# Art.-Nr: ZAW411WB
# Emergency light Self-contained
# Wall mounting, Wireless Basic (WB), 1 h, IP65, Zinc die-cast, White



Robust, zinc die-cast wall surface-mounted luminaire for illuminating escape and emergency routes.

Particularly suited to illuminating escape and emergency routes at the exit and outside the building up to a safe zone. The radiating characteristics distribute the light parallel to the wall.

Wireless control and monitoring for small installations of up to 50 luminaires with Wireless Basic.

More information
www.rp-group.com/en/item/ZAW411WB

## TECHNICAL DATA

| | |
|---|---|
| Luminaire type | Emergency light |
| Mounting | Wall mounting |
| Pictograph | No |
| Illuminant | LED |
| Housing material | Zinc die-cast |
| Housing color | White |
| Protection type (IP) | IP65 |
| Impact resistance (IK) | 8 |
| Certification | Waste disposal, CE, 5 Years waranty, D-sign |
| Insulation class | 1 |
| Supply | Self-contained |
| Monitoring | Wireless Basic (WB) |
| Bridging time | 1 h |
| Battery | LiFePO4 3,2 V/1,6 Ah |
| Operating mode | Non-maintained / maintained |
| Input voltage AC | 230 V |
| Input frequency | 50 / 60 Hz |
| Input voltage DC | - V |
| Power max. | 5,3 W |

| | |
|---|---|
| Power maintained | 3,9 W |
| Power non-maintained | 1,5 W |
| Ambient temperature maintained mode | -5 °C to 35 °C |
| Ambient temperature non-maintained mode | -5 °C to 40 °C |
| Depth | 315 mm |
| Width | 65 mm |
| Height | 140 mm |
| Weight | 2.07 |
| Weight incl. packaging | 2.19 |
| Connection cross-section | 2.5 mm² |
| Switching input | Yes |
| Emergency light blocking | No |
| Battery connection | Connector |
| Dimming function | No |
| Luminous flux mains | 190 lm |
| Luminous flux emergency | 190 lm |
| Customs tariff number | 94056180 |
| GTIN | 4262483024843 |

## TECHNICAL DRAWING

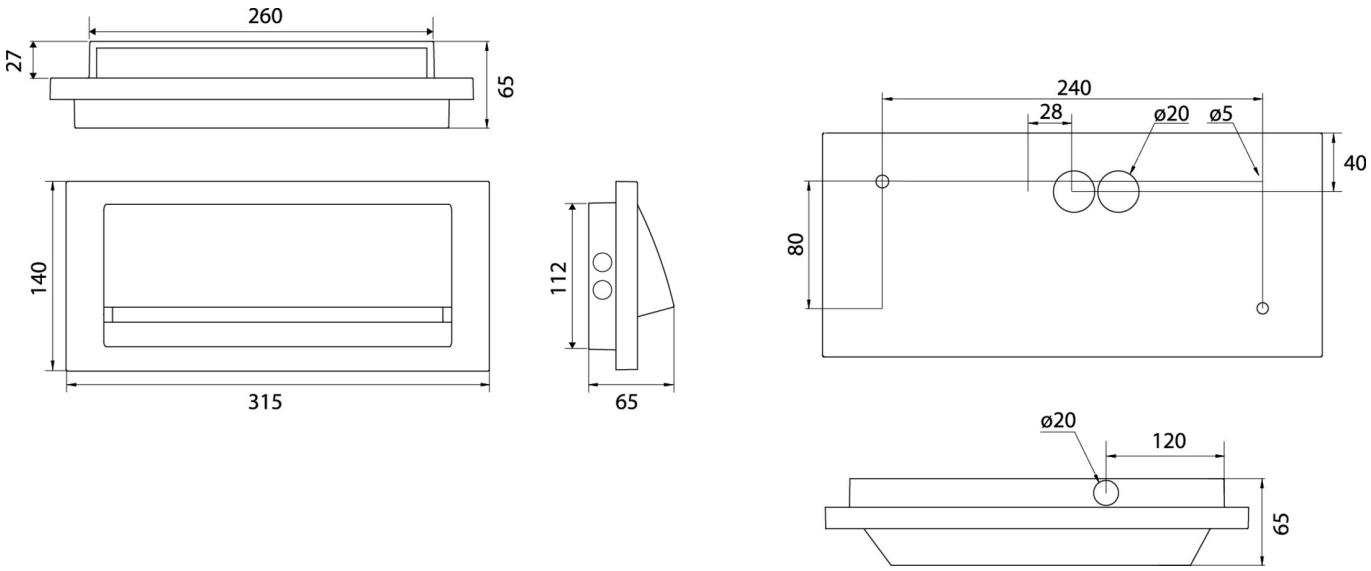


As of: 23.11.2026 - Subject to technical changes and errors.