## Art.-Nr: ZAW413WB-COOLIP54
## Emergency light Self-contained
## Wall mounting, Wireless Basic (WB), 3 h, IP65, Zinc die-cast, White, Outsourcing of the electronics or battery



Robust, zinc die-cast wall surface-mounted luminaire for illuminating escape and emergency routes.

Particularly suited to illuminating escape and emergency routes at the exit and outside the building up to a safe zone. The radiating characteristics distribute the light parallel to the wall.

Wireless control and monitoring for small installations of up to 50 luminaires with Wireless Basic. The designation "COOL" or "COOL IP54" indicates that the electronics and/or battery are housed externally. This special design ensures that the light functions reliably at low temperatures, while the electronic components are installed in a temperature-controlled environment. This guarantees stable performance and a long service life, even under demanding conditions.

More information
www.rp-group.com/en/item/ZAW413WB-COOLIP54

## TECHNICAL DATA

| | |
|---|---|
| Luminaire type | Emergency light |
| Mounting | Wall mounting |
| Pictograph | No |
| Illuminant | LED |
| Housing material | Zinc die-cast |
| Housing color | White |
| Protection type (IP) | IP65 |
| Impact resistance (IK) | 8 |
| Certification | Waste disposal, CE, 5 Years waranty, D-sign |
| Insulation class | 1 |
| Supply | Self-contained |
| Monitoring | Wireless Basic (WB) |
| Bridging time | 3 h |
| Battery | LiFePO4 3,2 V/3,3 Ah |
| Operating mode | Non-maintained / maintained |
| Input voltage AC | 230 V |

| | |
|---|---|
| Input frequency | 50 / 60 Hz |
| Input voltage DC | - V |
| Power max. | 5,3 W |
| Power maintained | 3,9 W |
| Power non-maintained | 1,5 W |
| Ambient temperature maintained mode | -25 °C to 35 °C |
| Ambient temperature non-maintained mode | -25 °C to 40 °C |
| Depth | 315 mm |
| Width | 65 mm |
| Height | 140 mm |
| Weight | 2.1 |
| Weight incl. packaging | 2.22 |
| Connection cross-section | 2.5 mm² |
| Switching input | Yes |
| Emergency light blocking | No |
| Battery connection | Connector |
| Dimming function | No |
| Luminous flux mains | 190 lm |
| Luminous flux emergency | 190 lm |
| Customs tariff number | 94056180 |
| GTIN | 4262483024997 |

## TECHNICAL DRAWING

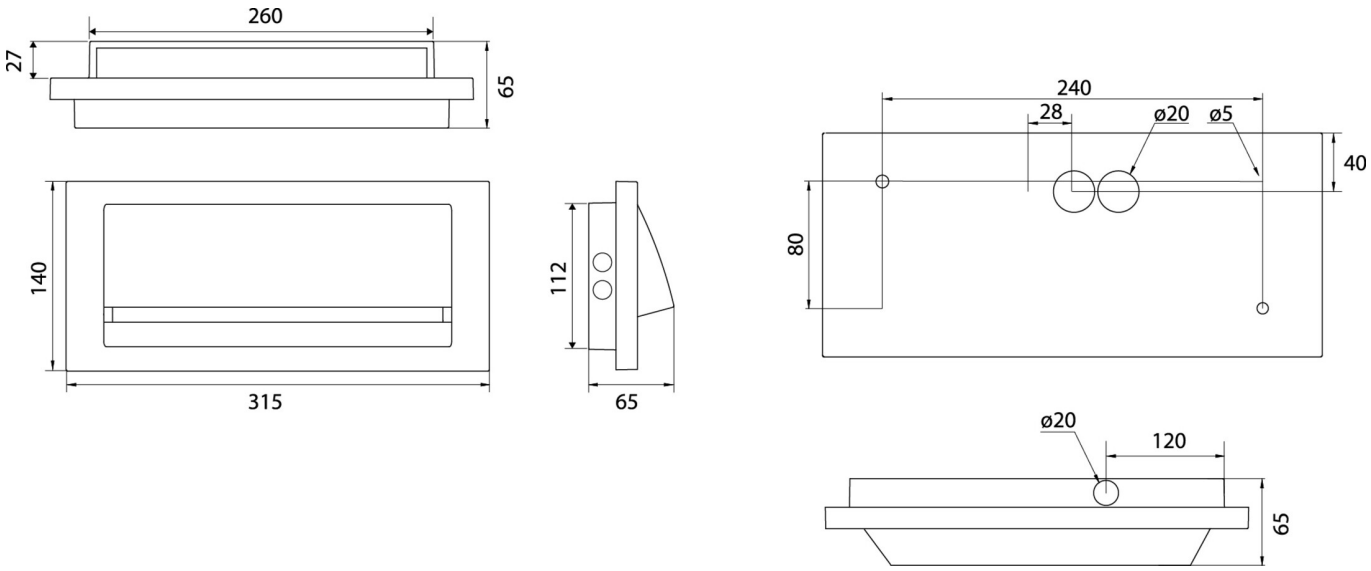


As of: 23.11.2026 - Subject to technical changes and errors.