RP GROUP
SOLUTIONS IN SAFETY + LIGHTING

Art.-Nr: ZAW413WL
Emergency light Self-contained Wall mounting, Wireless Professional (WL), 3 h, IP65, Zinc die-cast, White



Robust, zinc die-cast wall surface-mounted luminaire for illuminating escape and emergency routes.

Particularly suited to illuminating escape and emergency routes at the exit and outside the building up to a safe zone. The radiating characteristics distribute the light parallel to the wall.

Wireless central control and monitoring for large installations of up to 50,000 luminaires with Wireless Professional.

More information
www.rp-group.com/en/item/ZAW413WL

TECHNICAL DATA

Luminaire type	Emergency light
Mounting	Wall mounting
Pictograph	No
Illuminant	LED
Housing material	Zinc die-cast
Housing color	White
Protection type (IP)	IP65
Impact resistance (IK)	8
Certification	Waste disposal, CE, 5 Years waranty, D-sign
Insulation class	1
Supply	Self-contained
Monitoring	Wireless Professional (WL)
Bridging time	3 h
Battery	LiFePO4 3,2 V/3,3 Ah
Operating mode	Non-maintained / maintained
Input voltage AC	230 V
Input frequency	50 / 60 Hz
Input voltage DC	- V
Power max.	5,3 W

Power maintained	3,9 W
Power non-maintained	1,5 W
Ambient temperature maintained mode	-5 °C to 35 °C
Ambient temperature non-maintained mode	-5 °C to 40 °C
Depth	315 mm
Width	65 mm
Height	140 mm
Weight	2.1
Weight incl. packaging	2.22
Connection cross-section	2.5 mm²
Switching input	Yes
Emergency light blocking	No
Battery connection	Connector
Dimming function	No
Luminous flux mains	190 lm
Luminous flux emergency	190 lm
Customs tariff number	94056180
GTIN	4262483025000

TECHNICAL DRAWING

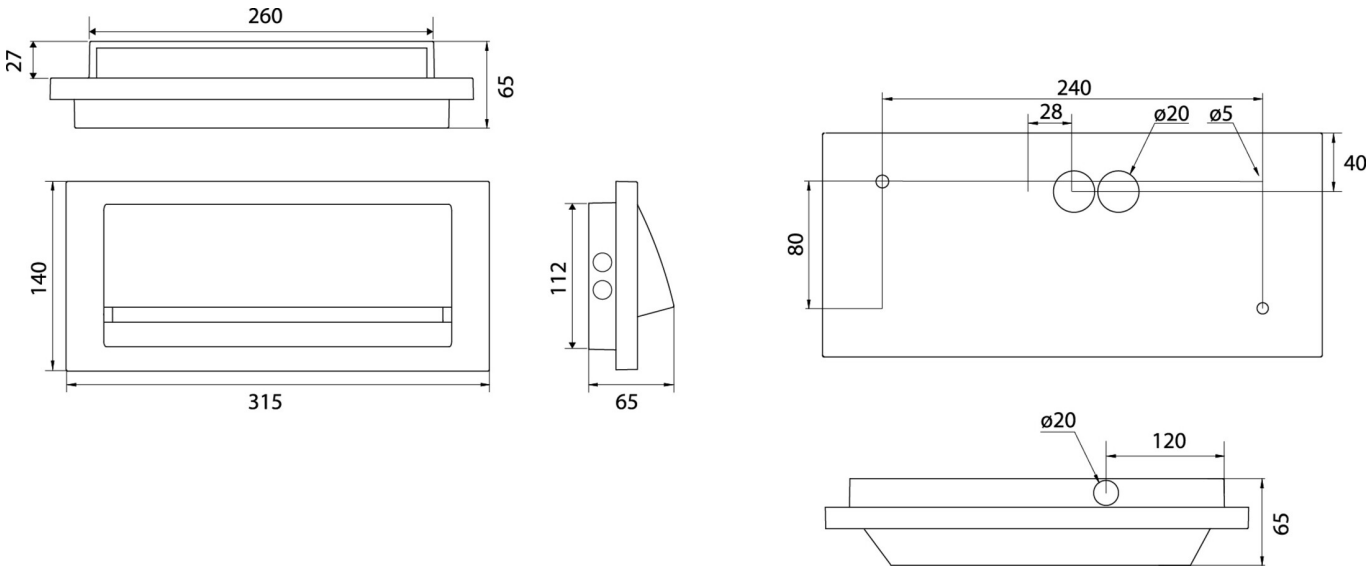

As of: 23.11.2026 - Subject to technical changes and errors.