RP GROUP
SOLUTIONS IN SAFETY + LIGHTING

Art.-Nr: LSD411WL
Exit sign Self-contained
Surface mounting, Wireless Professional (WL), 1 h, 56 m, IP40, Aluminum, Anodised aluminium, Piktogram as reqired

Robust emergency exit sign luminaire made from slim aluminium profile, for ceiling mounting. Suited to inscription on one or two sides.

The additional downward light emission helps to illuminate emergency and escape routes.

Wireless central control and monitoring for large installations of up to 50,000 luminaires with Wireless Professional. Two requested pictograms (arrow to the right, left, up, down or white) are supplied as standard.

CE

More information
www.rp-group.com/en/item/LSD411WL

TECHNICAL DATA

Luminaire type	Exit sign
Mounting	Surface mounting
Recognition distance	56 m
Pictograph	acc. to Specification
Illuminant	LED
Housing material	Aluminum
Housing color	Anodised aluminium
Protection type (IP)	IP40
Impact resistance (IK)	≥ 3
Certification	Waste disposal, CE
Insulation class	1
Supply	Self-contained
Monitoring	Wireless Professional (WL)
Bridging time	1 h
Battery	LiFePO4 3,2 V/1,2 Ah
Operating mode	Non-maintained / maintained
Input voltage AC	230 V
Input frequency	50 Hz
Power max.	7 W

Power maintained	5,6 W
Power non-maintained	0,8 W
Ambient temperature maintained mode	-5 °C to 40 °C
Ambient temperature non-maintained mode	-5 °C to 40 °C
Depth	62 mm
Width	614 mm
Height	334 mm
Weight	2.23
Weight incl. packaging	2.28
Connection cross-section	2.5 mm²
Switching input	Yes
Emergency light blocking	Yes
Battery connection	Connector
Dimming function	Yes
Luminous flux mains	450 lm
Luminous flux emergency	450 lm
Customs tariff number	94056180
GTIN	4262484982401

RP GROUP
SOLUTIONS IN SAFETY + LIGHTING

TECHNICAL DRAWING

RP GROUP
SOLUTIONS IN SAFETY + LIGHTING

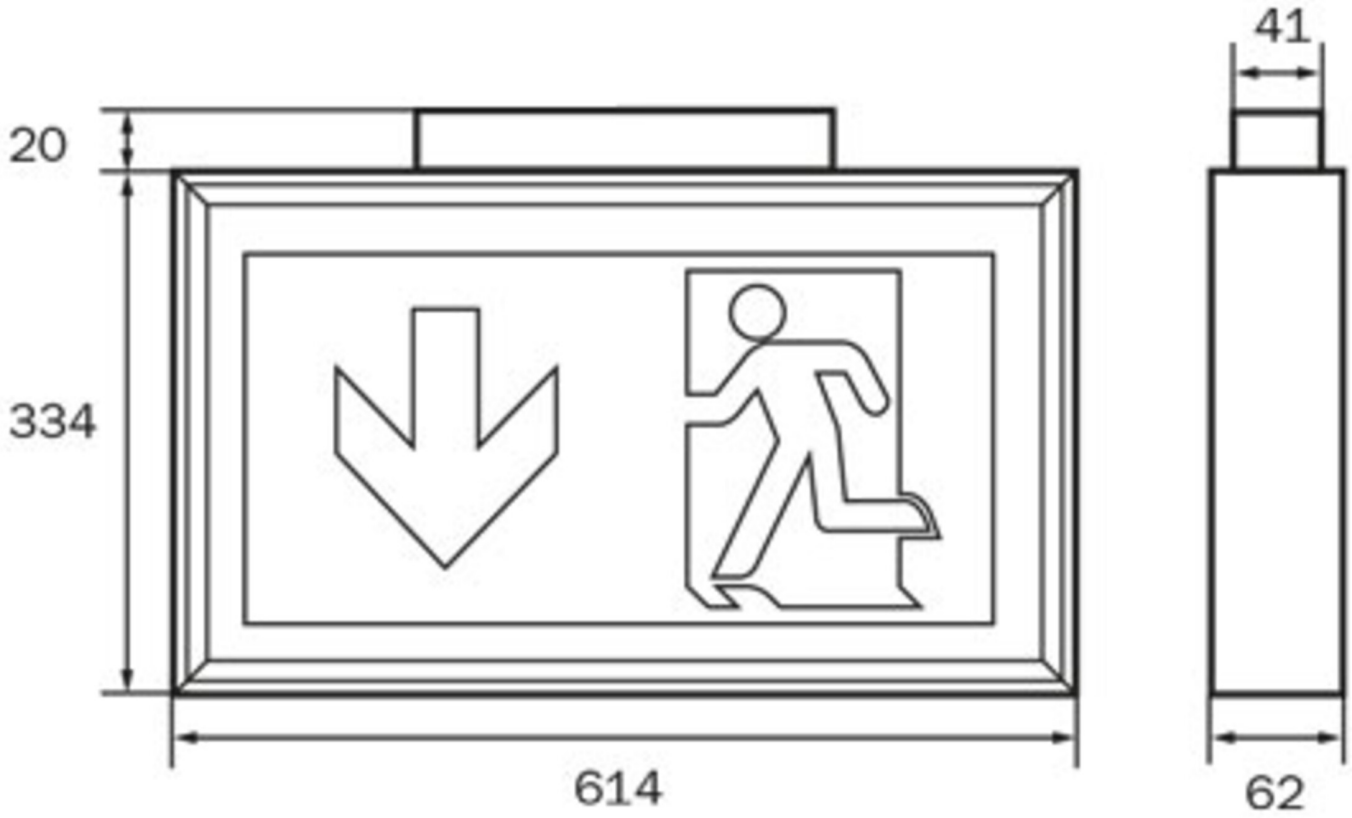

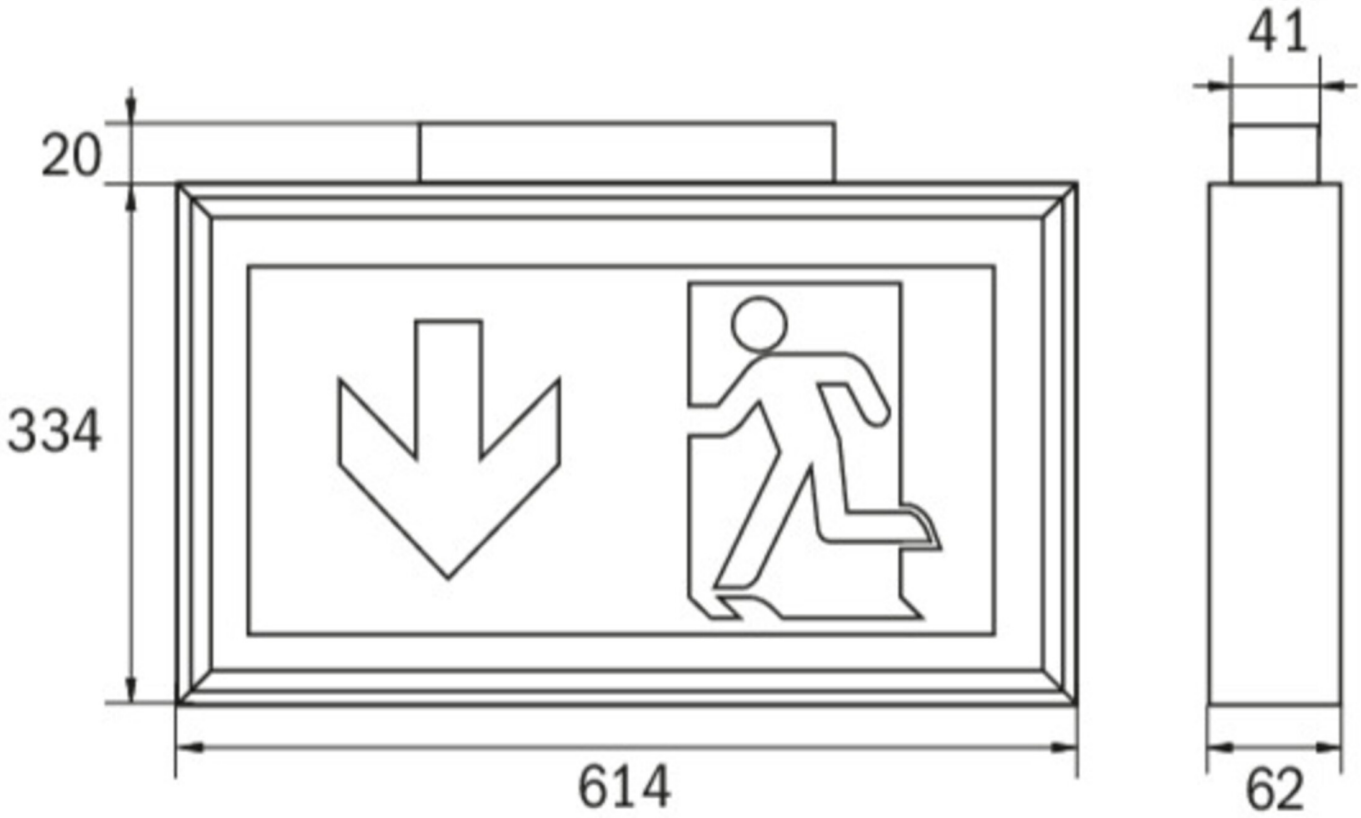

ACCESSORY LIST

DSA - Wire suspension

2PS-EB - Pendant

As of: 22.10.2026 - Subject to technical changes and errors.