RPower GELOGiV12170L
(12V 17Ah GEL Battery)

RP-TECHNIK
PART OF RP-GROUP

Floating Life at 20°C designed for up to 12 years

EAN: 4260123683283

Dimensions

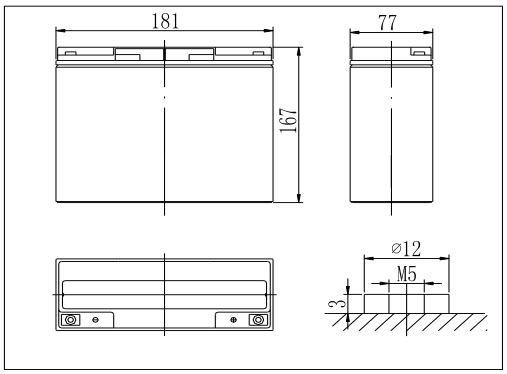

The Relationship for Charging Voltage and Temperature

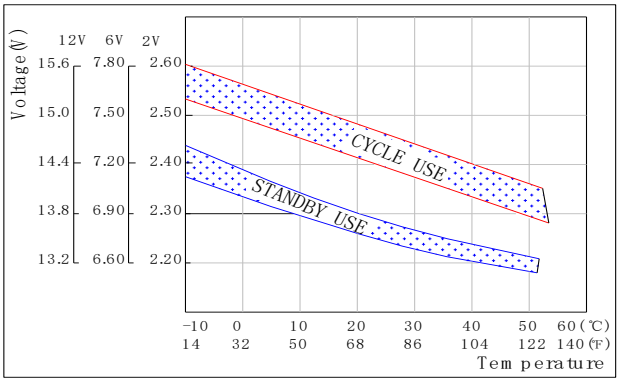

Specifications

Nominal Voltage		12V
Capacity (20hr@25°C@1.80V/C)		17Ah
Dimensions (±2mm)	Length	181mm (7.13inch)
	Width	77mm (3.03inch)
	Height	167mm (6.57inch)
	Total Height	167mm (6.57inch)
Approx. Weight		5.80kg (12.79lbs)
Maximum charging current		4.25A
Maximum discharge current		204A (5sec.)
Internal resistance		Approx. 18mΩ
Capacity affected by temperature (10hr)	40°C	103%
	25°C	100%
	0°C	88%
	-15°C	70%
Self-discharge (25°C)	3 month	Remaining Capacity: 94%
	6 month	Remaining Capacity: 88%
	12 month	Remaining Capacity: 75%
Nominal operating temperature		25°C ±3°C (77°F±5°F)
Operating temperature range		-20°C~55°C (-4°F~131°F)
Float charging voltage (25°C)		13.65 to 13.80V
Cyclic charging voltage (25°C)		14.40 to 15.00V
Terminal material		Copper

Charging Characteristics (25°C)

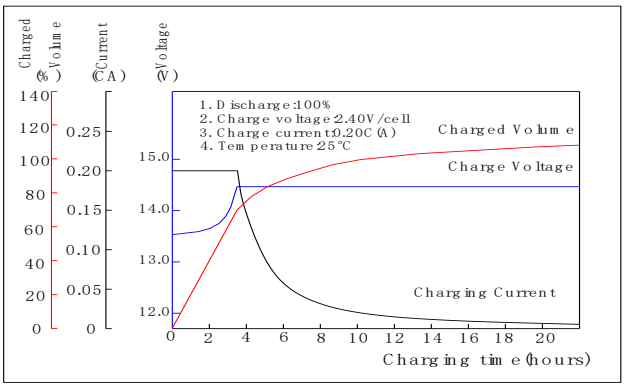

Discharge Characteristics (25°C)

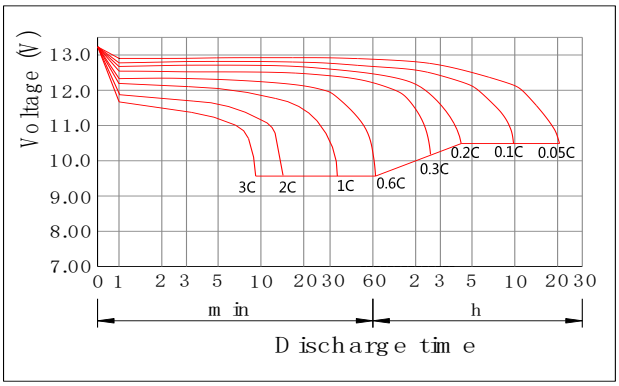

Constant Current Discharge Characteristics (Ampere / Battery, 25°C)

FV / TIME	5min	10min	15min	20min	30min	45min	1h	2h	3h	4h	5h	6h	8h	10h	20h
10.98V	27,30	19,80	16,90	15,40	12,00	9,06	7,58	4,76	3,61	2,97	2,56	2,20	1,76	1,52	0,83
10.80V	30,00	21,30	18,20	16,50	12,60	9,50	7,96	4,95	3,73	3,06	2,62	2,26	1,80	1,55	0,85
10.50V	35,50	24,70	20,70	18,50	13,90	10,30	8,52	5,24	3,94	3,20	2,72	2,34	1,86	1,58	0,87
10.20V	41,80	28,40	23,10	19,90	14,90	10,90	9,01	5,56	4,11	3,31	2,81	2,42	1,91	1,62	0,88
9.90V	45,30	30,10	24,10	20,80	15,40	11,30	9,35	5,70	4,24	3,39	2,86	2,46	1,94	1,64	0,89
9.60V	50,60	33,00	25,90	22,50	16,50	12,10	9,93	5,93	4,41	3,52	2,95	2,52	1,98	1,67	0,90

Constant Power Discharge Characteristics (Watt / Battery, 25°C)

FV / TIME	5min	10min	15min	20min	30min	45min	1h	2h	3h	4h	5h	6h	8h	10h	20h
10.98V	306,60	222,60	191,40	175,80	137,40	105,00	88,20	55,70	42,40	35,00	30,20	26,20	20,90	18,10	9,96
10.80V	333,60	238,20	204,00	186,60	144,60	109,80	92,40	57,80	43,70	35,90	30,90	26,80	21,40	18,50	10,10
10.50V	386,40	271,20	229,80	207,60	157,20	117,60	98,40	61,20	46,10	37,60	32,00	27,60	22,10	18,80	10,40
10.20V	446,40	306,00	252,00	221,40	167,40	124,20	103,80	64,20	47,90	38,70	32,90	28,50	22,70	19,30	10,50
9.90V	475,20	319,80	259,20	227,40	171,60	127,80	106,80	66,00	49,20	39,50	33,50	28,90	23,00	19,50	10,60
9.60V	520,20	344,40	274,20	243,60	182,40	136,20	112,80	67,80	50,90	40,90	34,40	29,50	23,30	19,90	10,70