Exit sign
Art.-No.: AMCP003SC-AZ

The AMCP is a zinc-diecast exit sign with pendant fitting for recessed ceiling mounting and for the marking of escape routes. It is part of a complete luminaire series, which features solutions for every mounting situation and was honored with the German Design Award. Luminaires of the A-Series are equipped with modern LED illuminants and offer flexibility with changeable pictograms.

LED exit sign according to EN 60598-1, EN 60598-2-22, EN 7010 and EN 1838

TECHNICAL DATA

Luminaire type	Exit sign
Mounting	Recessed ceiling
Viewing distance	22 m
Pictograph	Set
Illuminant	LED
Housing material	Zinc die-cast
Colour	RAL 7016
Mechanical rating IP	20
Impact resistance IK	≥ 3
Protection class	2
Supply	Single battery
Monitoring	Self-Control
Operation time	3 h
Battery	4,8V/2,0Ah NiMH
Operation mode	maintained/non-maintained mode
Input Voltage AC	230 V
Input Frequency Hz	50 / 60 Hz
Power consumption max.	4,7 W
Power consumption maintained	4,7 W
Power consumption non-maintained	1,95 W
Ambient temperature maintained mode	-5 °C / 40 °C
Ambient temperature non-maintained mode	-5 °C / 40 °C
Length	79 mm
Width	241 mm

Height	159 mm
Install. dim. length	176 mm
Install. dim. width	68 mm
Install. dim. height	40 mm
Weight	1.4 kg
Weight incl. Packaging	1.76 kg
Connection cross-section	2.5 mm
Switching input L'	Yes
Emergency light blocking	Yes
Battery connector	Plug
Dimming function	Yes
Customs tariff number	94056180
Coutry of origin	Germany
EAN	4260581713591

TECHNICAL DRAWING

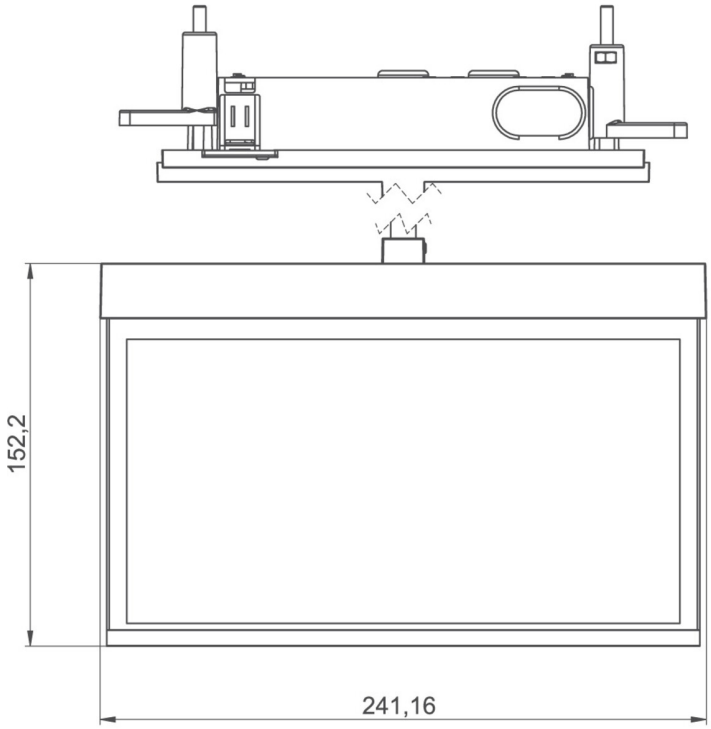

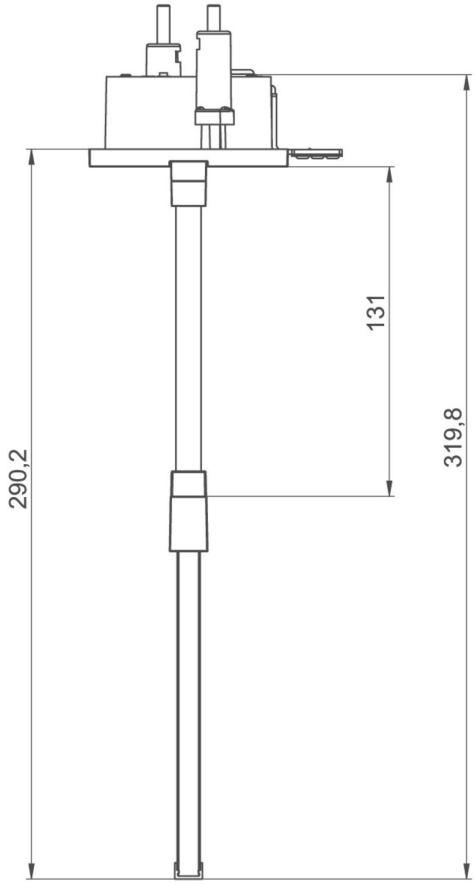

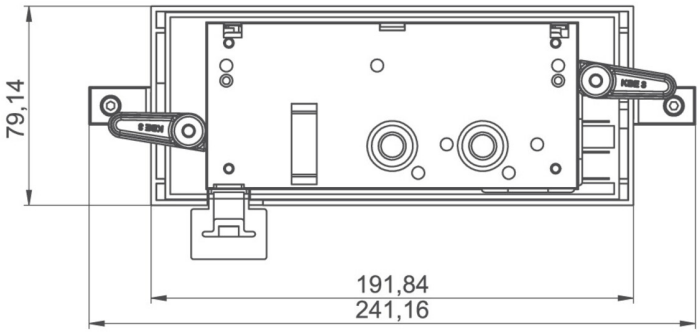

ACCESSORIES

AM-XBE - A-Serie SB - concrete recessed housing

AM-X-PKG-.. -

State: 17.04.2024 - Subject to technical changes