RP GROUP
SOLUTIONS IN SAFETY + LIGHTING

Art.-Nr: BALLPLX-KBU
Wire mesh surround
Wire mesh surround 300x140x77mm including clips, clear Plexiglas for KB

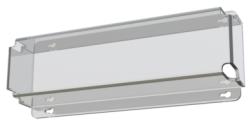

The transparent Plexiglas (PMMA) wire mesh surround is suitable for use in sports halls. It is resistant to impact from balls in accordance with DIN 18032 and, with IK10, provides a high level of protection against impact and shock loading. As well as providing protection, is also offers a clear view of the luminaire.

More information
www.rp-group.com/en/item/BALLPLX-KBU

TECHNICAL DATA

Depth	77 mm
Width	150 mm
Height	420 mm
Weight	0.54 kg
Customs tariff number	39269097
EAN	4260581710781

RP GROUP
SOLUTIONS IN SAFETY + LIGHTING

TECHNICAL DRAWING

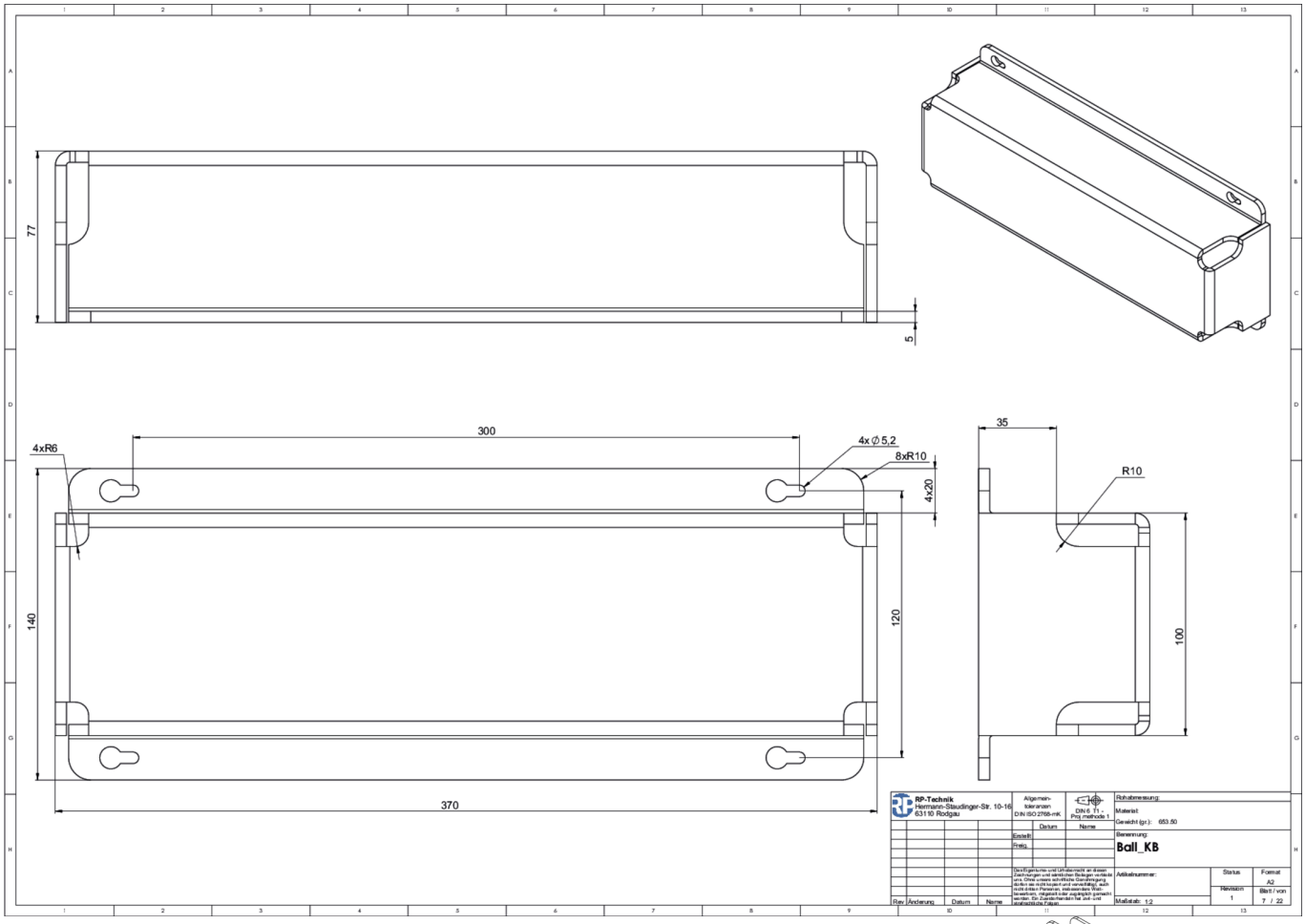

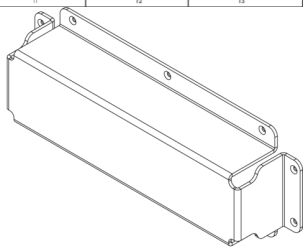

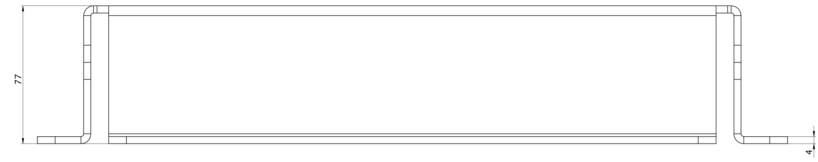

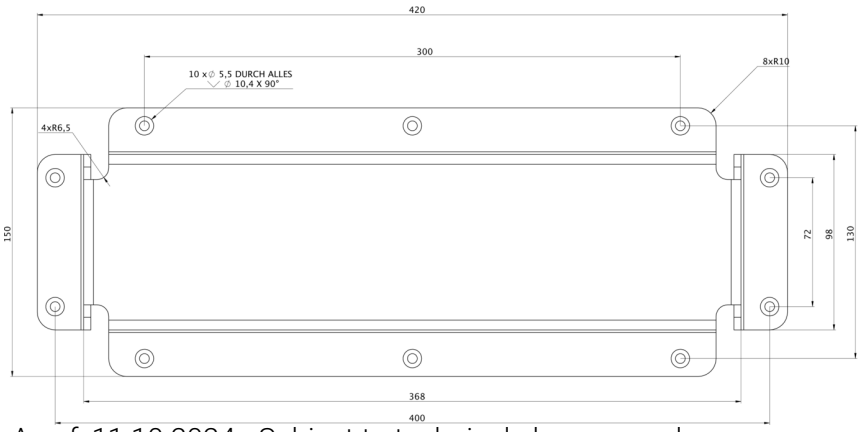

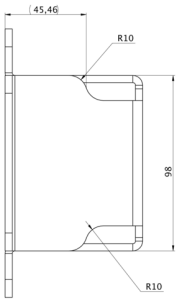

As of: 11.10.2024 - Subject to technical changes and errors.