Emergency luminaire
Art.-No.: DOE028

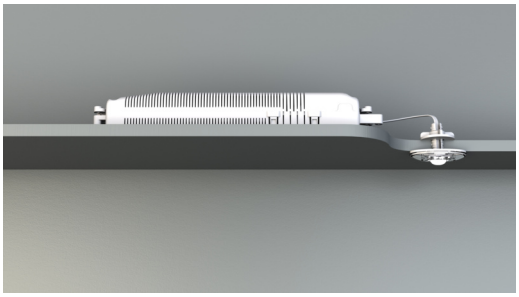

Compact Emergency lighting unit with oval lighting ERT-LED luminaire for the lighting of escape and rescue routes according to DIN EN 60598-1, DIN EN 60598-2-22 and EN 1838. For recessed mounting or snap-on mounting on T5/T8 illuminants and metal objects. The transparent body material makes the luminaire fit in any setting. Available including the electronics box or as a bulk version for application in an existing luminaire cases. Dowel and clips included – magnetic base optional.

TECHNICAL DATA

Luminaire type	Emergency luminaire
Mounting	Recessed ceiling
Pictograph	No
Illuminant	LED
Housing material	Plastic
Colour	Opal
Mechanical rating IP	20
Impact resistance IK	≥ 3
Protection class	2
Supply	Single battery
Monitoring	None
Operation time	8 h
Battery	9,6V/2.0Ah NiMH
Operation mode	maintained/non-maintained mode
Input Voltage AC	230 V
Input Frequency Hz	50 / 60 Hz
Power consumption max.	4,4 W
Power consumption maintained	1,8 W
Power consumption non-maintained	0,35 W
Ambient temperature maintained mode	-5 °C / 40 °C
Ambient temperature non-maintained mode	-5 °C / 40 °C
Length	24 mm
Width	50 mm
Height	12 mm

Install. dim. diameter	10.5 mm
Weight	0.46 kg
Weight incl. Packaging	0.54 kg
Connection cross-section	2.5 mm
Switching input L'	Yes
Emergency light blocking	Yes
Battery connector	Plug
Dimming function	Yes
Luminous flux mains mode	140 lm
Luminous flux emergency mode	140 lm
Customs tariff number	94056120
Coutry of origin	Germany
EAN	4260349828598

TECHNICAL DRAWING

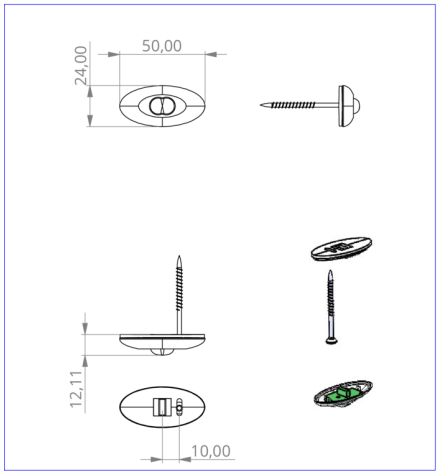

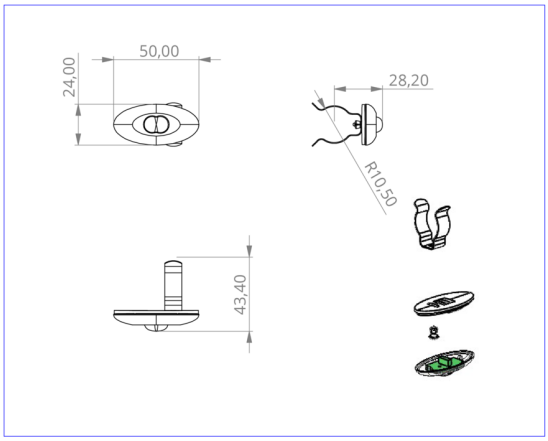

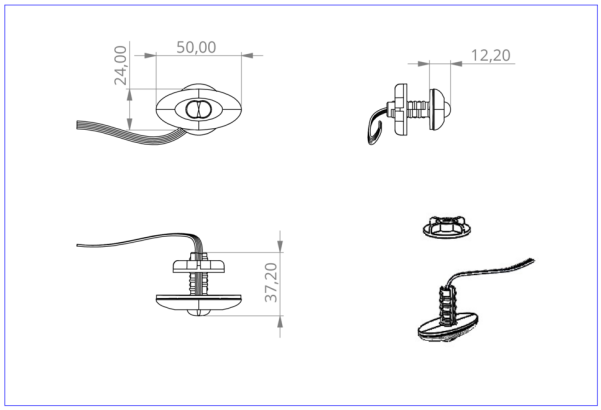

DO verschiedene Einbaumaße