EEQF028WL-AZ

RP-TECHNIK
PART OF RP-GROUP

ER-Light recessed/oval, SB + WL/8h, cover square

LED emergency luminaire for ceiling mounting and for the lighting of escape and rescue routes according to DIN EN 60598-1, DIN EN 60598-2-22 and DIN EN 1838.
The zinc-aluminum downlight fits unobtrusively on the ceiling. Mounting is possible as normal recessed ceiling mounting as well as in conventional fire protection boxes. The status LED integrated within the lens does not interrupt the harmony of the housing. The optimal light distribution and lighting of escape and rescue routes is achieved by use of cluster lenses and powerful ERT LED technology.

Technical data

Luminaire type	Emergency luminaire
Mounting	Ceiling
Viewing distance	
Pictograph	No
Illuminant	LED
Housing material	Zinc die-cast
Colour	RAL 7016
Mechanical rating IP	20
Impact resistance IK	
Protection class	2
Supply	Self-Contained
Monitoring	WL
Operation time	8 h
Battery	4,8V/2,0Ah NiMH
Operation mode	maintained/non-maintained mode
Input Voltage AC	230 V
Input Frequency Hz	50 / 60 Hz
Input Voltage DC	- V
Power consumption max.	3 W
Power consumption maintained	1,6 W
Power consumption non-maintained	0,35 W
Ambient temperature maintained mode	-5 ºC / 40 ºC

Ambient temperature non-maintained mode	-5 ºC / 40 ºC
Length	22 mm
Width	90 mm
Height	90 mm
Diameter	
Install. dim. length	
Install. dim. width	
Install. dim. height	
Install. dim. diameter	68 mm
Weight	0.43 kg
Weight incl. Packaging	0.56 kg
Connection cross-section	2.5 mm
Switching input L'	Yes
Emergency light blocking	Yes
Battery connector	Plug
Dimming function	Yes
Luminous flux mains mode	140 lm
Luminous flux emergency mode	140 lm
Customs tariff number	94056080
Coutry of origin	DEUTSCHLAND
EAN	4260581717834

Technical drawing

Maße & Lochausschnitt EER / EEQ
Dimensions & Hole cutout EER / EEQ

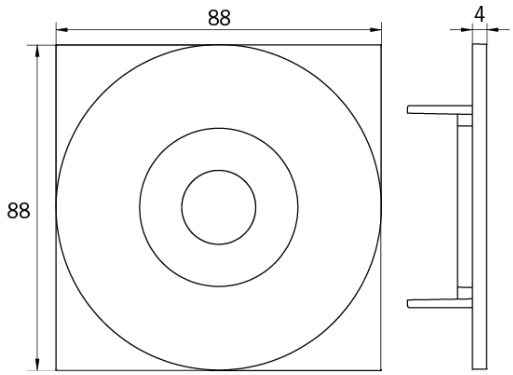

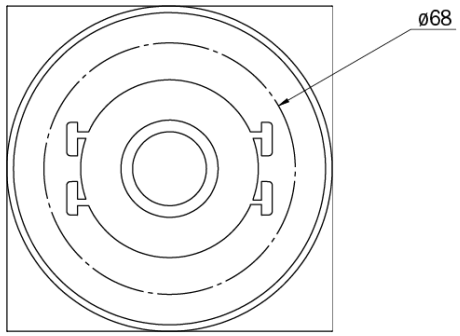

Maße und Bohrabstände EAR / EAQ
Dimensions and drilling distances EAR/ EAQ

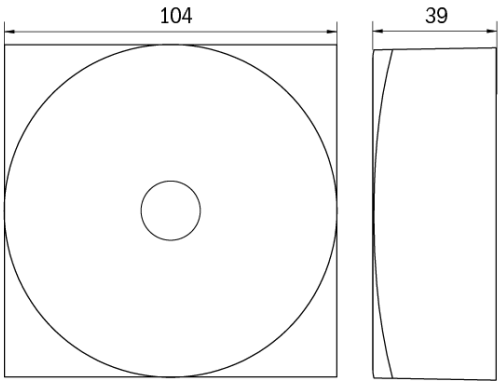

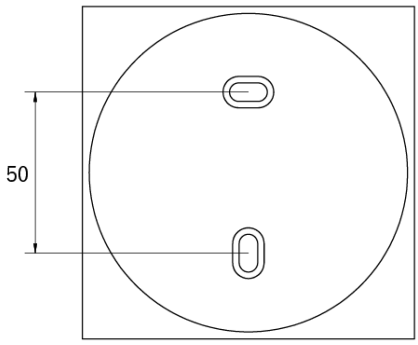

State of: 11 / 2019