Emergency luminaire
Art.-No.: EEQR029ML-AZ

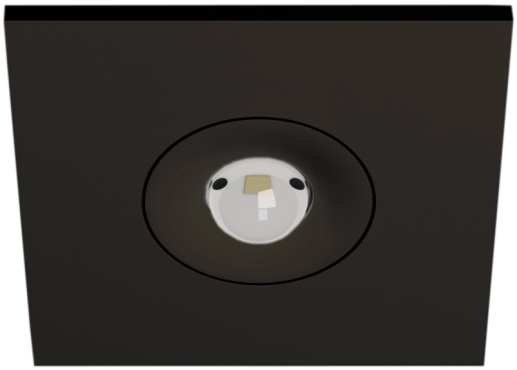

LED emergency luminaire for ceiling mounting and for the lighting of escape and rescue routes according to DIN EN 60598-1, DIN EN 60598-2-22 and DIN EN 1838.
The zinc-aluminum downlight fits unobtrusively on the ceiling. Mounting is possible as normal recessed ceiling mounting as well as in conventional fire protection boxes. The status LED integrated within the lens does not interrupt the harmony of the housing. The optimal light distribution and lighting of escape and rescue routes is achieved by use of cluster lenses and powerful ERT LED technology.

TECHNICAL DATA

Luminaire type	Emergency luminaire
Mounting	Recessed ceiling
Pictograph	No
Illuminant	LED
Housing material	Zink-Druckguss
Colour	RAL 7016
Mechanical rating IP	20
Impact resistance IK	≥ 3
Protection class	2
Supply	Central power supply system
Monitoring	ML - Central power supply system
Operation time	CPS
Operation mode	single luminaire switching
Input Voltage AC	230 V
Input Frequency Hz	50 / 60 Hz
Input Voltage DC	216 V
Power consumption max.	2,1 W
Power consumption maintained	2,1 W
Power consumption non-maintained	0,7 W
Ambient temperature maintained mode	-35 °C / 40 °C
Ambient temperature non-maintained mode	-35 °C / 40 °C
Length	88 mm

Width	88 mm
Height	4 mm
Install. dim. diameter	68 mm
Weight	0.28 kg
Weight incl. Packaging	0.41 kg
Connection cross-section	2.5 mm
Switching input L'	No
Emergency light blocking	No
Battery connector	None
Dimming function	No
Luminous flux mains mode	140 lm
Luminous flux emergency mode	140 lm
Customs tariff number	94056180
Coutry of origin	Germany
EAN	4260581717858

TECHNICAL DRAWING

Maße EER / EEQ

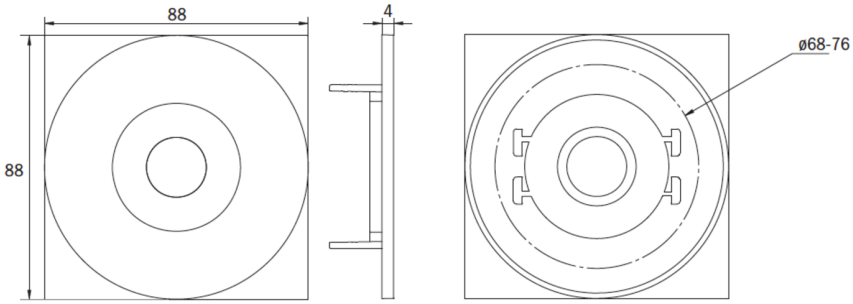

Einzelbatterie-Elektronik-Box (UH-1)

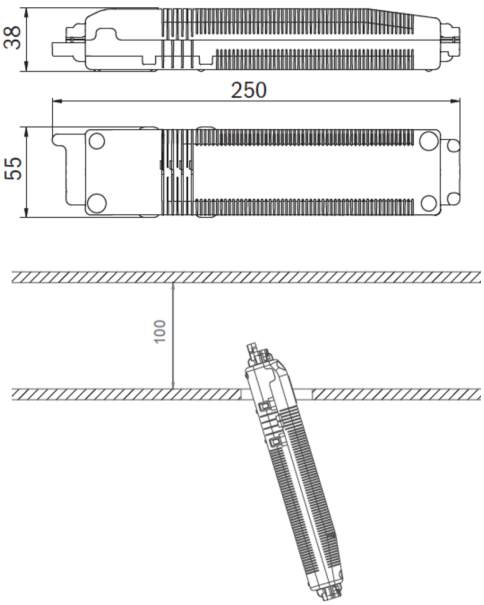

Lochausschnitt EER / EEQ

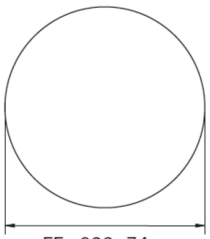

EExx023: 74mm
EExx029: 68mm

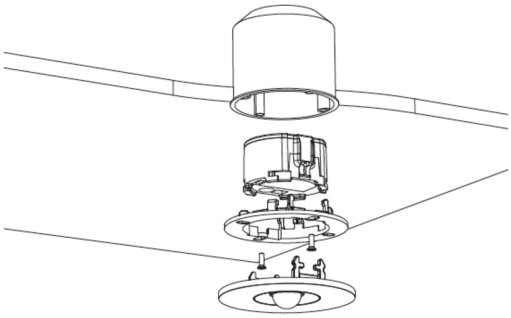

EExx029: Schalterdose notwendig (nicht im Lieferumfang enthalten)

State: 29.11.2022 - Subject to technical changes