Emergency luminaire
Art.-No.: ILES023WL

The discreet designed LED emergency luminaire IL is a true all-rounder. Whether as self- contained emergency light or to connect to central battery systems: it is fit for most challanges and always provides the right solution. As many as four different lenses are available for different light distribution and make a perfect adaptation to the respective mounting situation possible. All versions of the IL are available for surface mounting and as recessed mounted luminaires.

The IL recessed mounted luminaire consists of 2 parts, the recessed mounted part includes the power supply terminals. The electronic part of the luminaire is at disassembly mains voltage free.

TECHNICAL DATA

Luminaire type	Emergency luminaire
Mounting	Recessed ceiling
Pictograph	No
Illuminant	LED
Housing material	Polycarbonate
Colour	RAL 9003
Mechanical rating IP	20
Impact resistance IK	≥ 3
Protection class	2
Supply	Single battery
Monitoring	WL - Wireless Professional
Operation time	3 h
Battery	4,8V/2,0Ah NiMH
Operation mode	maintained/non-maintained mode
Input Voltage AC	230 V
Input Frequency Hz	50 / 60 Hz
Power consumption max.	4 W
Power consumption maintained	2 W
Power consumption non-maintained	0,4 W
Ambient temperature maintained mode	-5 °C / 30 °C
Ambient temperature non-maintained mode	-5 °C / 40 °C

Height	84 mm
Diameter	122 mm
Install. dim. height	80 mm
Install. dim. diameter	105 mm
Weight	0.27 kg
Weight incl. Packaging	0.33 kg
Connection cross-section	2.5 mm
Switching input L'	Yes
Emergency light blocking	No
Battery connector	Plug
Dimming function	Yes
Luminous flux mains mode	110 lm
Luminous flux emergency mode	240 lm
Customs tariff number	94056120
Coutry of origin	Germany
EAN	4260349824644

TECHNICAL DRAWING

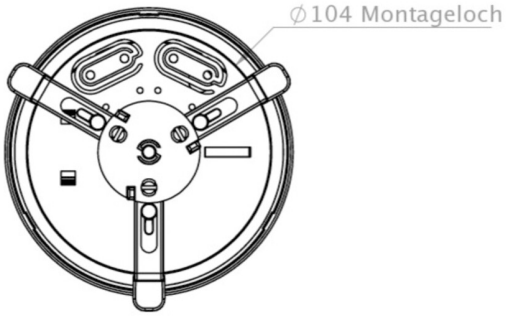

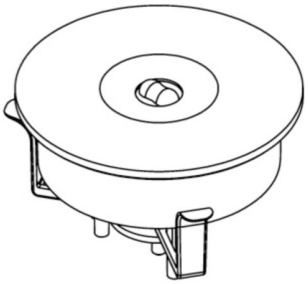

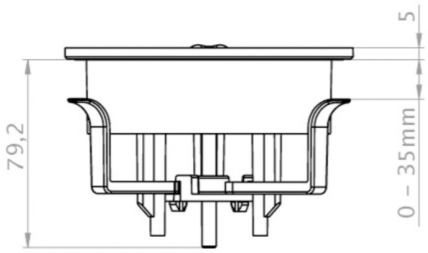

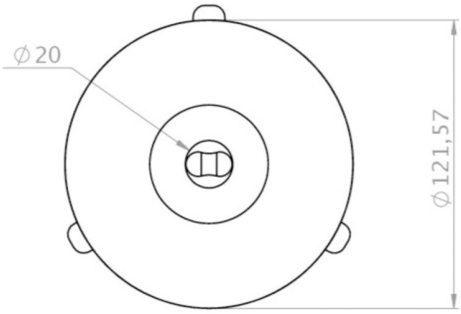

ACCESSORIES

BALLPLX-ILE - Ball protection 190x190x62mm incl. fastening

ILE-OEF-PC - IL recessed opener plastic