KBU013WL-COOL

RP-TECHNIK
PART OF RP-GROUP

ES/ER-Light universal, SB + WL/3h

LED exit sign / emergency light according to DIN EN 60598-1, EN 60598-2-22, EN 7010 and DIN EN 1838.
Cuboid plastic housing design reduced on the lamps substance. Modular design and universal mounting for use as emergency luminaire with and without the application of pictograms. The modular system allows the luminaire to be converted to an exit sign luminaire at any time without dismantling or tools. Panes for mounting pictographs have to be ordered seperately.

The COOL light is equipped with an external battery housing for installation in the building. The installation of the lamp can be done outdoors or in cold stores.

Technical data

Luminaire type	Exit sign / ER-light
Mounting	Ceiling
Viewing distance	14-30 m
Pictograph	Einzeln n.A.
Illuminant	LED
Housing material	Plastic
Colour	RAL 9003
Mechanical rating IP	64
Impact resistance IK	
Protection class	2
Supply	Self-Contained
Monitoring	WL
Operation time	3 h
Battery	
Operation mode	maintained/non-maintained mode
Input Voltage AC	230 V
Input Frequency Hz	50 / 60 Hz
Input Voltage DC	- V
Power consumption max.	7,5 W
Power consumption maintained	7,5 W
Power consumption non-maintained	3,6 W
Ambient temperature maintained mode	-25 ºC / 40 ºC

Ambient temperature non-maintained mode	-25 ºC / 40 ºC
Length	50 mm
Width	326 mm
Height	50 mm
Diameter	
Install. dim. length	
Install. dim. width	
Install. dim. height	
Install. dim. diameter	
Weight	0.68 kg
Weight incl. Packaging	0.73 kg
Connection cross-section	2.5 mm
Switching input L'	Yes
Emergency light blocking	No
Battery connector	Clamp
Dimming function	Yes
Luminous flux mains mode	150 lm
Luminous flux emergency mode	150 lm
Customs tariff number	94056020
Coutry of origin	Deutschland
EAN	

RP-TECHNIK
PART OF RP-GROUP

Technical drawing

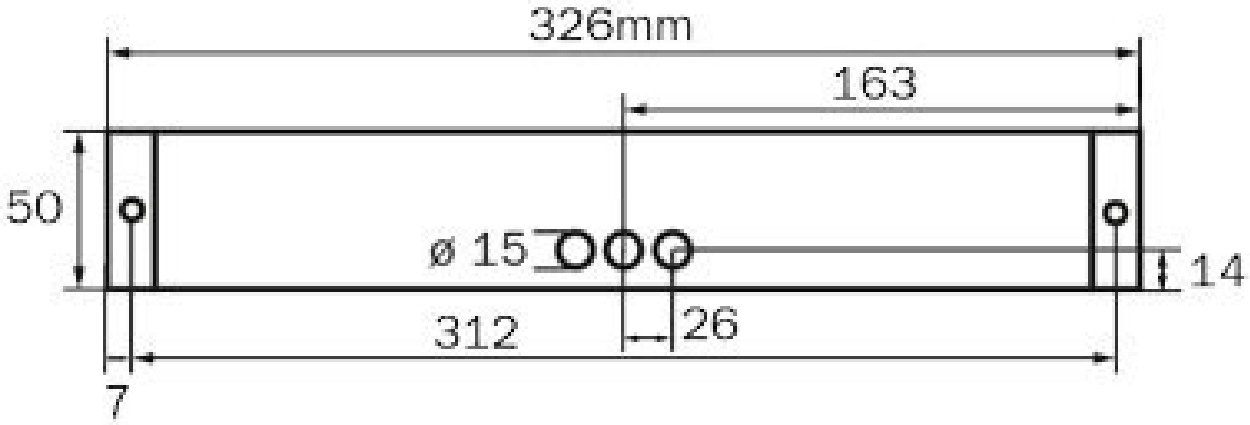
326mm
163
50
ø 15
14
312
26
7

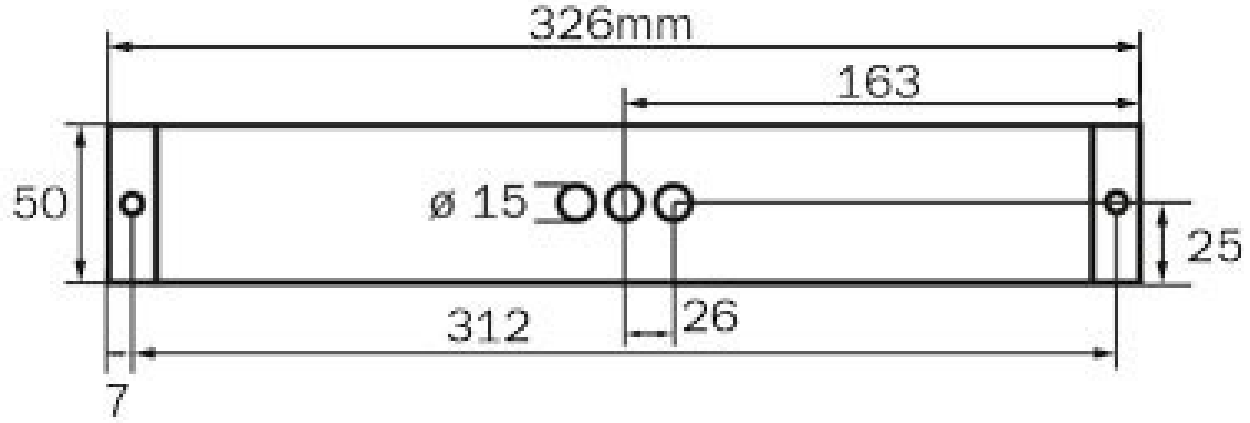
326mm
163
50
ø 15
25
312
26
7

355
70
Tiefe / Depth 60mm

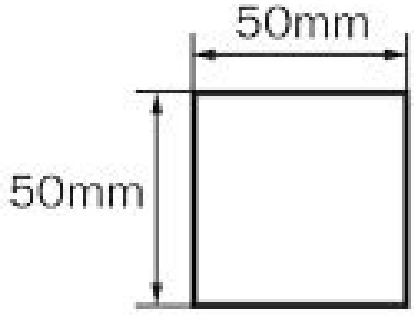
50mm
50mm

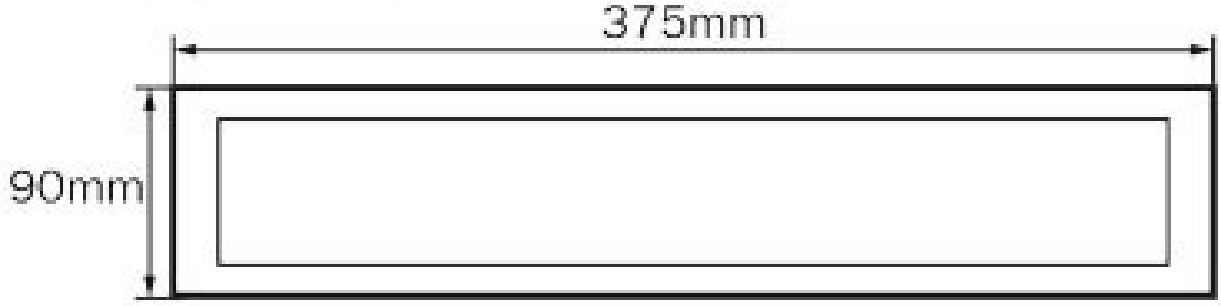
375mm
90mm

Accessory list

KBK	KB disc VD 14m incl. pictoset
KBM	KB disc VD 22m incl. pictoset
KBG	KB disc VD 30m incl. pictoset
AWX001	Wall bracket, white
KBE	KB recessed frame - ABS white
BALLPLX-KBE	Ball protection 415x171x31mm incl. fastening
BALLPLX-KBS	Ball protection 410x322x77mm incl. fastening
BALLPLX-KBU	Ball protection 300x140x77mm outside
2PW-EB	2x PW - pendulum white 500mm pre-wired
2DW-EB	2x DW - design pendulum baldachin, distance 180mm
KBBE	
DSA	cord suspension set 1,5m

State of: 08 / 2019