RP GROUP
SOLUTIONS IN SAFETY + LIGHTING

Art.-Nr: LXD018
Exit sign Single Battery
Ceiling, 8 h, 34 m, IP40, Aluminium, Anodised aluminium

Emergency luminaire in a sleek Aluminium profile, matt andonized for deiling mounting with an additional light source to light the Floor below the luminaire. Housing is openable toollessly. Applicable for maintained or non-maintained operation. The toolless Change and variable use of these pictograms provide planning security on site. Pluggable set of pictograms (left, right, down, up) is included in the scope of delivery. Emergency luminaire according to DIN EN 60598-1, DIN EN 60598-2-22 und DIN EN 1838.

More information

TECHNICAL DATA

Luminaire type	Exit sign
Mounting	Ceiling
Recognition distance	34 m
Pictograph	Set
Illuminant	LED
Housing material	Aluminium
Housing color	Anodised aluminium
Protection type (IP)	IP40
Impact resistance (IK)	3
Certification	Waste disposal, CE
Insulation class	1
Supply	Single Battery
Bridging time	8 h
Battery	8xHFR-AA2000mAh Akkumulator 9,6V 2,0Ah NimH Pack - Quad Config + 300mm Wire
Operating mode	Standby circuit / permanent circuit
Input voltageAC	230 V
Input frequency	50 / 60 Hz
Power max.	6,7 W
Power DS	4,5 W
Power BS	0,35 W

Depth	62 mm
Width	384 mm
Height	214 mm
Weight	1.53
Weight incl. packaging	1.73
Connection cross-section	2.5 mm²
Switching input	Yes
Emergency light blocking	Yes
Battery connection	Connector
Dimming function	Yes
Luminous flux mains	220 lm
Luminous flux emergency	160 lm
Customs tariff number	94056080
Country of origin	Deutschland
EAN	4260349829762

RP GROUP
SOLUTIONS IN SAFETY + LIGHTING

TECHNICAL DRAWING

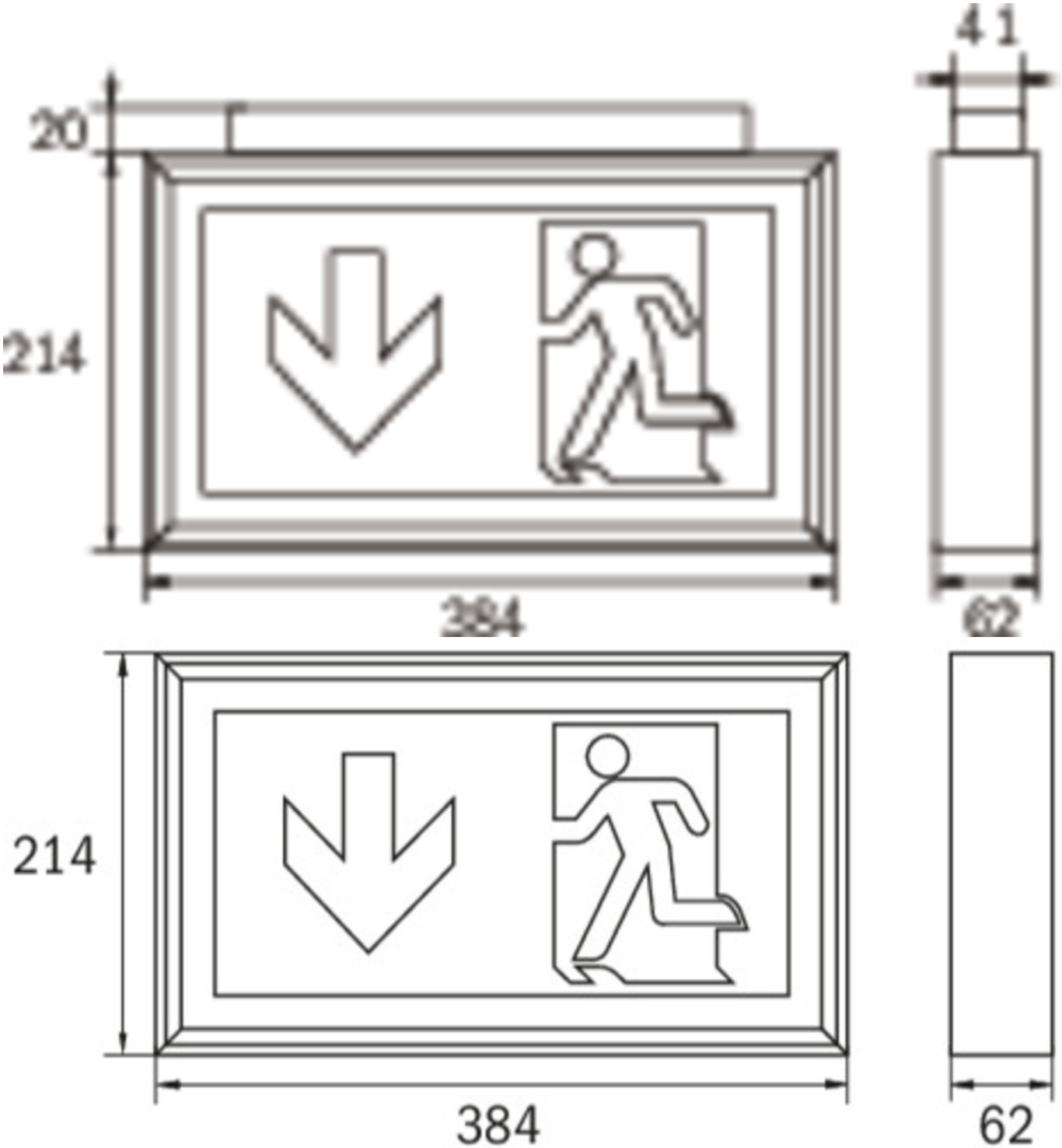

ACCESSORY LIST

DSA -

2PS-EB -

2DS-EB -

RELATED PRODUCTS

Art.-No.	Image	Monitoring	Supply	Color	Investment	Automatic log	Maintenance level	Remote maintenance	max. luminaires	Single luminaire monitoring
LXD018BC	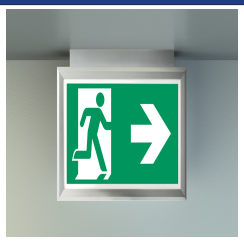	Bus control								
LXD018SC		SelfControl	Single battery		€	no	high	no	unlimited	itself

stand: 21.06.2024 - Subject to technical changes and errors.