RP GROUP
SOLUTIONS IN SAFETY + LIGHTING

Art.-Nr: LXD019ML
Exit sign Centralised power supply systems
Ceiling, Central power supply (ML), CPS, 34 m, IP40, Aluminium, Anodised aluminium

Robust emergency exit sign luminaire made from slim aluminium profile, for ceiling mounting. Suited to inscription on one or two sides.

The additional downward light emission helps to illuminate emergency and escape routes.

Control and monitoring via central power supply system. The innovative integrated lens holder with a rapid fitting fixture permits the flexible use of various lens types. Using the right lens allows the distribution of light to be matched perfectly to the application and simplifies illumination which satisfies all relevant standards. A round lens and hall lens are supplied with every luminaire, allowing it to be adapted perfectly to the respective mounting situation. Other lenses, such as a spotlight lens, beam lens or H lens, are available as options.

CE

More information
www.rp-group.com/en/item/LXD019ML

TECHNICAL DATA

Luminaire type	Exit sign
Mounting	Ceiling
Recognition distance	34 m
Pictograph	Set
Illuminant	LED
Housing material	Aluminium
Housing color	Anodised aluminium
Protection type (IP)	IP40
Impact resistance (IK)	3
Certification	WEEE, CE
Insulation class	1
Supply	Centralised power supply systems
Monitoring	Central power supply (ML)
Bridging time	CPS
Battery	/
Operating mode	single luminaire switching

Input voltageAC	230 V
Input frequency	50 / 60 Hz
Input voltage DC	216 V
Power max.	5,2 W
Power DS	5,2 W
Power BS	1,1 W
Ambient temperature DS	-20 °C - 40 °C
Ambient temperature BS	-20 °C - 40 °C
Depth	62 mm
Width	384 mm
Height	214 mm
Weight	1.29
Weight incl. packaging	1.49
Connection cross-section	2.5 mm²
Switching input	Yes
Emergency light blocking	No
Battery connection	No
Dimming function	Yes
Luminous flux mains	300 lm
Luminous flux emergency	300 lm
Customs tariff number	94056180
EAN	4260123681876

RP GROUP
SOLUTIONS IN SAFETY + LIGHTING

TECHNICAL DRAWING

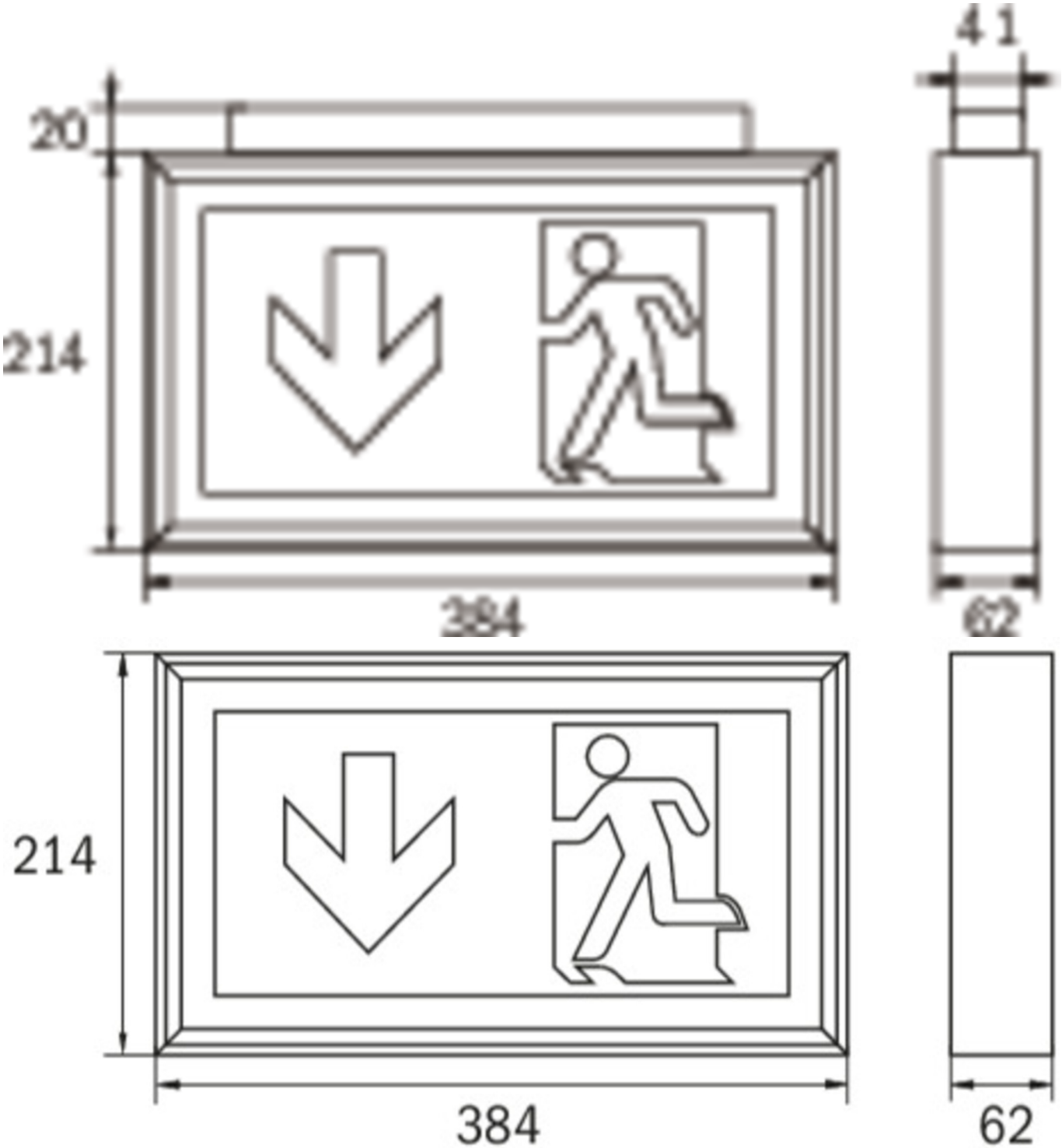

ACCESSORY LIST

DSA - Wire suspension

2PS-EB - Pendant

2DS-EB -

RELATED PRODUCTS

Art.-No.	Image	Monitoring	Supply	Color	Investment	Automatic log	Maintenance level	Remote maintenance	max. luminaires	Single luminaire monitoring

As of: 11.10.2024 - Subject to technical changes and errors.