RP GROUP
SOLUTIONS IN SAFETY + LIGHTING

Art.-Nr: MMD008SC-AZ
Exit sign Single Battery
Ceiling, SelfControl (SC), 8 h, 21 m, IP40, Zinc die-cast, Anthracite

Slim, high-quality, zinc die-cast emergency exit sign luminaire with a modern design for ceiling mounting. Suited to inscription on one or two sides.

Automatic monitoring of safety luminaire with SelfControl. The innovative integrated lens holder with a rapid fitting fixture permits the flexible use of various lens types. Using the right lens allows the distribution of light to be matched perfectly to the application and simplifies illumination which satisfies all relevant standards. A round lens and hall lens are supplied with every luminaire, allowing it to be adapted perfectly to the respective mounting situation. Other lenses, such as a spotlight lens, beam lens or H lens, are available as options.

CE

More information
www.rp-group.com/en/item/MMD008SC-AZ

TECHNICAL DATA

Luminaire type	Exit sign
Mounting	Ceiling
Recognition distance	21 m
Pictograph	Set
Housing material	Zinc die-cast
Housing color	Anthracite
Protection type (IP)	IP40
Impact resistance (IK)	≥ 3
Certification	WEEE, CE
Insulation class	1
Supply	Single Battery
Monitoring	SelfControl (SC)
Bridging time	8 h
Battery	NIMH 4,8V V/2,0Ah Ah
Operating mode	Standby circuit / permanent circuit
Input voltageAC	230 V
Input frequency	50 / 60 Hz

Power max.	7,4 W
Power DS	7,4 W
Power BS	3,25 W
Ambient temperature DS	-5 °C - 40 °C
Ambient temperature BS	-5 °C - 40 °C
Depth	52 mm
Width	236 mm
Height	138 mm
Weight	0.19
Weight incl. packaging	0.19
Connection cross-section	2.5 mm²
Switching input	Yes
Emergency light blocking	Yes
Battery connection	Connector
Dimming function	Yes
Customs tariff number	94056180
EAN	4260659562847

TECHNICAL DRAWING

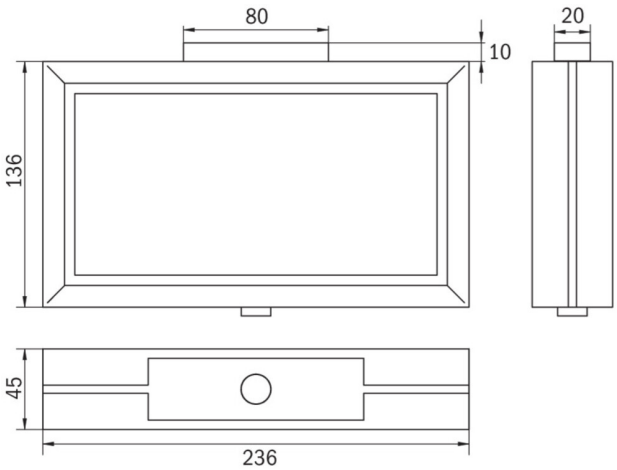

MMD

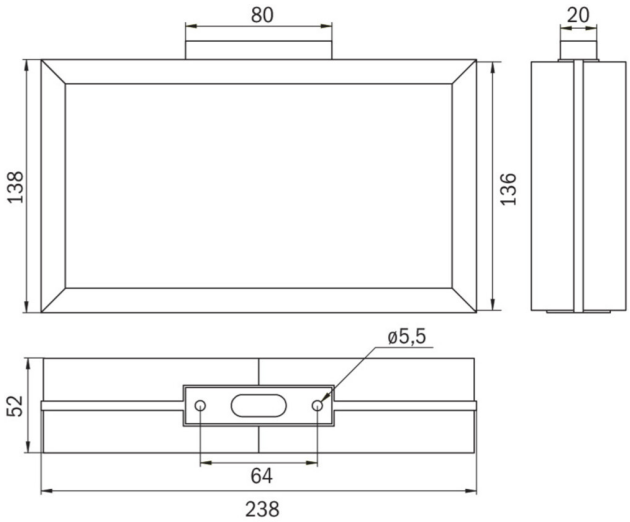

MMD_IP65

RELATED PRODUCTS

Art.-No.	Image	Monitoring	Supply	Color	Investment	Automatic log	Maintenance level	Remote maintenance	max. luminaires	Single luminaire monitoring
MMD008SC		SelfControl (SC)	Single battery	RAL 9003	€	no	high	no	unlimited	itself

As of: 11.10.2024 - Subject to technical changes and errors.