RP GROUP
SOLUTIONS IN SAFETY + LIGHTING

Art.-Nr: YPAPR-QEND-3601-U
LED panel "PREMIUM"
ceiling inlay luminaire, square,

LED recessed luminaire, PREMIUM series, for 625 mm ceiling module. Flat shape. Aluminium frame, white, powder-coated. Diffuser made from plastic (PMMA), opal, non-yellowing. Power supply, can be switched or dimmed (DALI/TRIAC dimmer), external. UGR < 19 and screen-compliant in accordance with EN 12464-1. Version with CASAMBI® Bluetooth control available.

More information
www.rp-group.com/en/item/YPAPR-QEND-3601-U

TECHNICAL DATA

Dimensions	
Product dimensions Length	620 mm
Product dimensions Width	620 mm
Product dimensions Height	10 mm
Product weight	3.3 kg
Packaging dimensions	
Packaging dimensions Length	690 mm
Packaging dimensions Width	650 mm
Packaging dimensions Height	45 mm
Weight incl. packaging	3.4 kg
Cutout Dimensions	
Installation depth	50 mm
Color	
Color	white
Housing material	
Housing material	Aluminium
Certification	
Certification	CE, TÜV Rheinland Type approved, RoHS
Insulation class	2
Protection type (IP)	IP20
Protection type (IP)	IP40

Shock resistance level (IK)	3
Glow wire test	650 °C
Electrical connection	
Connection cross-section	1.5 mm²
Type of dimming	DALI
System performance	36 W
Input voltage AC	220-240V / 50-60Hz V
Starting current	6.83 A
Power factor	95 PF
Starting time	156 µs
Light data	
Light source	LED
Rated luminous flux	3600 lm
Colour rendering index	> 80 Ra
Beam angle	90 °
Color temperature	4000 K
Light color	840
UGR	18.8
Service life	50000 h, L70
Light yield	100 lm/w
Temperatures	
Ambient temperature (Min)	-20 °C
Ambient temperature (Max)	+40 °C
power supply	
Number of power supply units on LS B10A	14 pcs.
Number of power supply units on LS B16A	23 pcs.
Number of power supply units at LS C10A	18 pcs.
Number of power supply units at LS C16A	30 pcs.
Electrical design	with external control gear, Dimmable

TEXT.LICHTVERTEILUNG

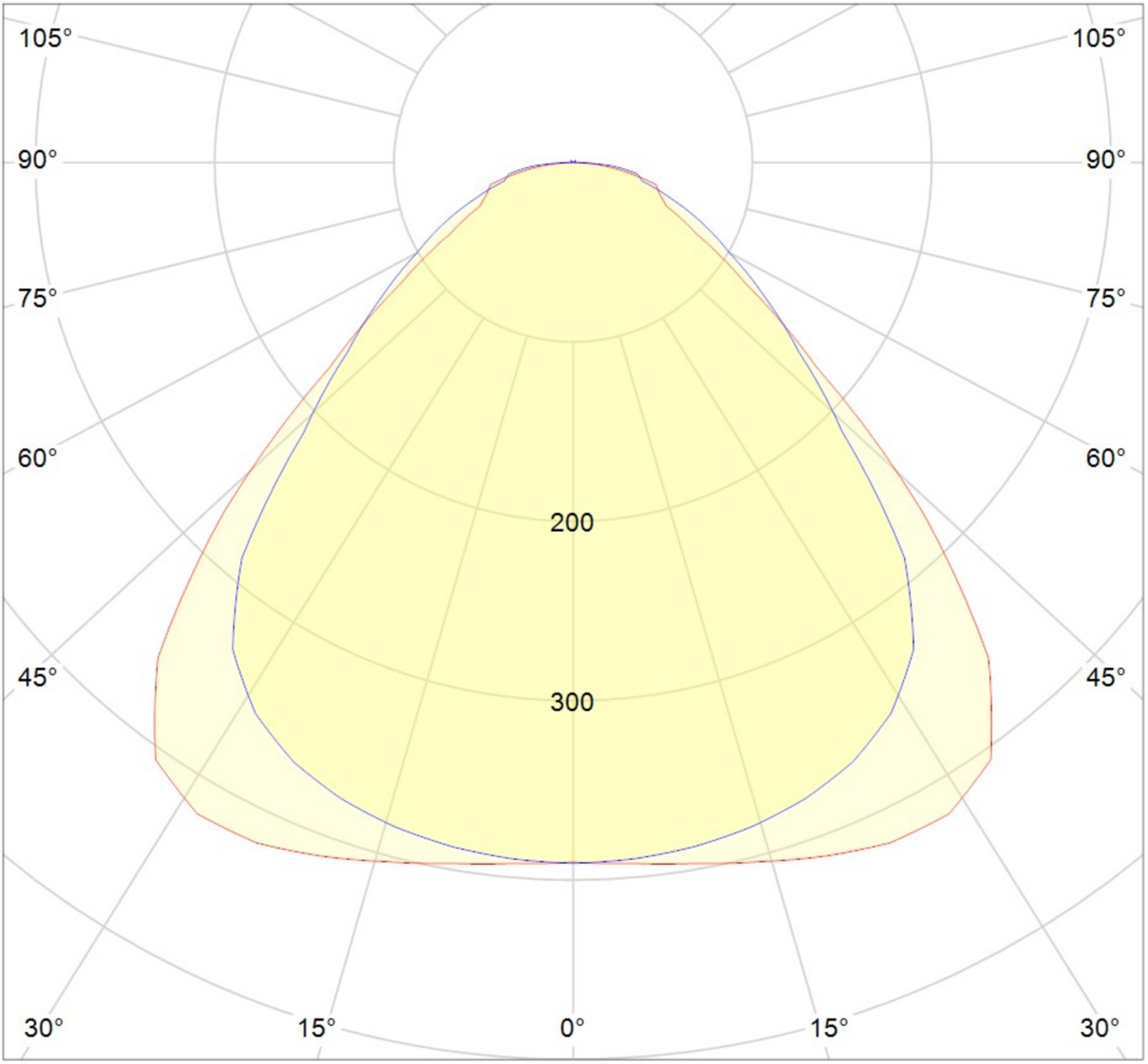

cd/klm

η = 100%

C0 - C180 C90 - C270

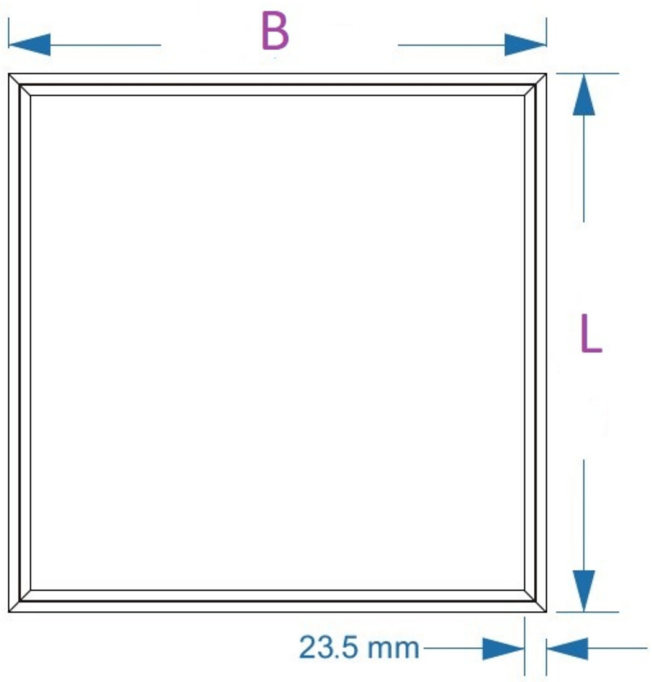

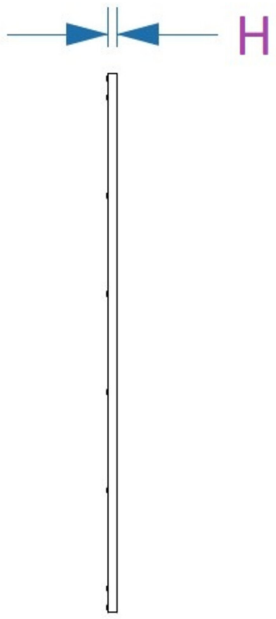

As of: 23.08.2024 - Subject to technical changes and errors.