RP GROUP
SOLUTIONS IN SAFETY + LIGHTING

Art.-Nr: ZAW011WL
Safety luminaire Single Battery
Wall, Wireless Professional (WL), 1 h, , IP65, Zinc die-cast, white

Robust, zinc die-cast wall surface-mounted luminaire for illuminating escape and emergency routes.

Particularly suited to illuminating escape and emergency routes at the exit and outside the building up to a safe zone. The radiating characteristics distribute the light parallel to the wall.

Wireless central control and monitoring for large installations of up to 50,000 luminaires with Wireless Professional.

CE

More information
www.rp-group.com/en/item/ZAW011WL

TECHNICAL DATA

Luminaire type	Safety luminaire
Mounting	Wall
Pictograph	No
Illuminant	LED
Housing material	Zinc die-cast
Housing color	white
Protection type (IP)	IP65
Impact resistance (IK)	8
Certification	WEEE, CE
Insulation class	1
Supply	Single Battery
Monitoring	Wireless Professional (WL)
Bridging time	1 h
Battery	LiFePO4 3,2V V/3,3 Ah
Operating mode	Standby circuit / permanent circuit
Input voltageAC	230 V
Input frequency	50 / 60 Hz
Input voltage DC	- V
Power max.	5,3 W

Power DS	3,9 W
Power BS	1,5 W
Ambient temperature DS	-5 °C - 35 °C
Ambient temperature BS	-5 °C - 40 °C
Depth	315 mm
Width	65 mm
Height	140 mm
Weight	2.1
Weight incl. packaging	2.22
Connection cross-section	2.5 mm²
Switching input	Yes
Emergency light blocking	No
Battery connection	Connector
Dimming function	No
Luminous flux mains	190 lm
Luminous flux emergency	190 lm
Customs tariff number	94056180
EAN	4260682140890

TECHNICAL DRAWING

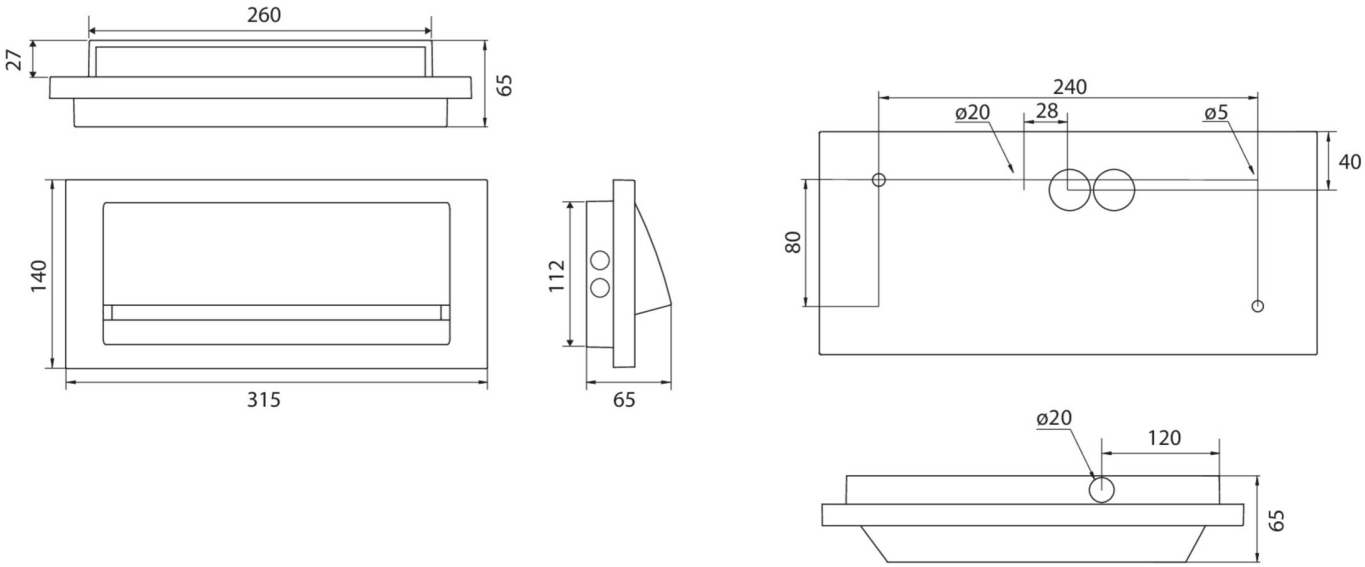

As of: 11.10.2024 - Subject to technical changes and errors.