RP GROUP
SOLUTIONS IN SAFETY + LIGHTING

Art.-Nr: ZAW018SC-COOL
Safety luminaire Single Battery
Wall, SelfControl (SC), 8 h, , IP65, Zinc die-cast, white

Robust wall-mounted Zinc die-cast luminaire for the lighting of escape and rescue routes in exit areas according to DIN EN 60598-1, DIN EN 60598-2-22 and EN 1838. Appealing design with concealed screws.
Available for central power systems or as a LED self-contained emergency luminaire.

The COOL light is equipped with an external battery housing for installation in the building. The installation of the lamp can be done outdoors or in cold stores.

Automatic monitoring of safety luminaire with SelfControl.

CE

More information
www.rp-group.com/en/item/ZAW018SC-COOL

TECHNICAL DATA

Luminaire type	Safety luminaire
Mounting	Wall
Pictograph	No
Illuminant	LED
Housing material	Zinc die-cast
Housing color	white
Protection type (IP)	IP65
Impact resistance (IK)	8
Certification	WEEE, CE
Insulation class	1
Supply	Single Battery
Monitoring	SelfControl (SC)
Bridging time	8 h
Battery	LiFePO4 3,2V V/3,3 Ah
Operating mode	Standby circuit / permanent circuit
Input voltageAC	230 V
Input frequency	50 / 60 Hz
Input voltage DC	- V
Power max.	4,6 W

Power DS	3,3 W
Power BS	1 W
Ambient temperature DS	-25 °C - 40 °C
Ambient temperature BS	-25 °C - 40 °C
Depth	315 mm
Width	65 mm
Height	140 mm
Weight	2.1
Weight incl. packaging	2.22
Connection cross-section	2.5 mm²
Switching input	Yes
Emergency light blocking	No
Battery connection	Connector
Dimming function	No
Luminous flux mains	190 lm
Luminous flux emergency	85 lm
Customs tariff number	94056180
EAN	4260581710996

TECHNICAL DRAWING

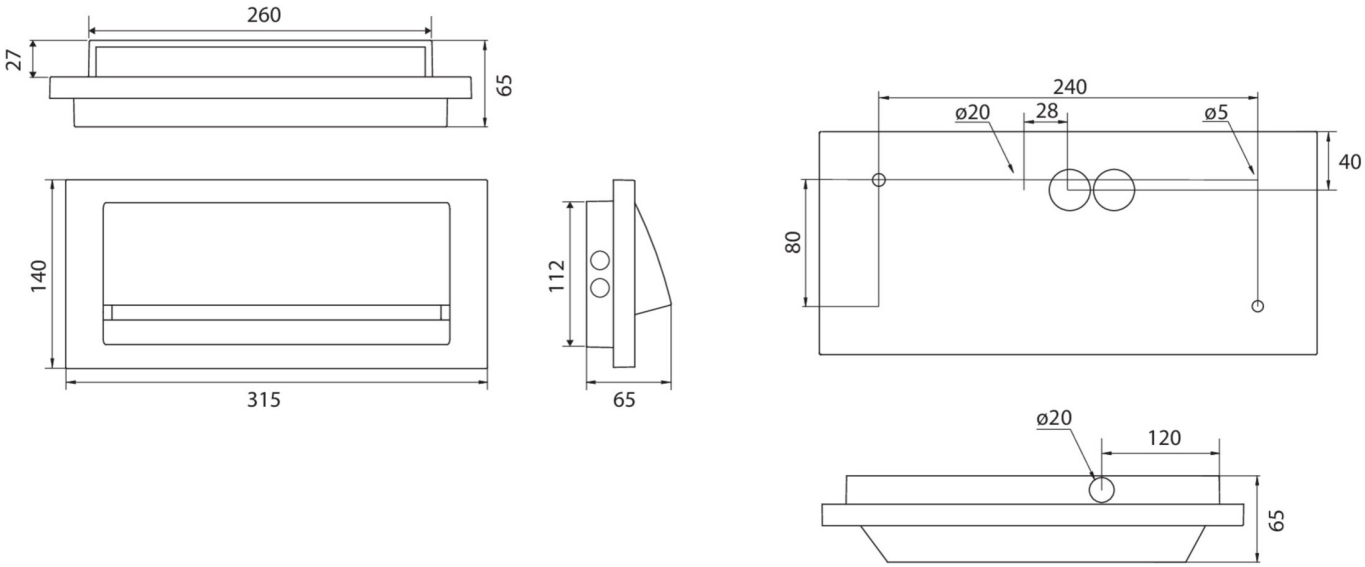

As of: 11.10.2024 - Subject to technical changes and errors.